Appendix B

Greers Ferry Lake 1994 Shoreline Management Plan

US Army Corps
of Engineers
Little Rock District

Shoreline Management Plan For Greers Ferry Lake

Appendix F To
Design Memorandum No. 19-5
April 1993

CESWD-CO-RP (CESWL-CO-L/3 Nov 94) 1st End Mr. McCauley/jw/ 7-2434
SUBJECT: Shoreline Management Plan for Greers Ferry Lake, Supplement No. 1

CDR, U.S. Army Corps of Engineers, Southwestern Division,
1114 Commerce Street, Dallas, TX 75242 21 NOV 1994

FOR Commander, Little Rock District

1. The proposed revisions to the Shoreline Management Plan for Greers Ferry Lake are approved.

2. ER 1130-2-406, Shoreline Management at Civil Works Projects, dated 31 October 1990, provides that vegetation modification permittees "will not create the appearance of private ownership of public lands." For this reason, and in view of considerations presented, I concur in your recommendation to retain the current mowing limit (50 feet from habitable structures) in lieu of the 200 foot limit petitioned by some lake residents.

Encls
wd

JAMES P. KING
Colonel, EN
Commanding

CF (w/cy basic & encl 2):
CECW-ON

DEPARTMENT OF THE ARMY
LITTLE ROCK DISTRICT, CORPS OF ENGINEERS
POST OFFICE BOX 867
LITTLE ROCK, ARKANSAS 72203-0867

REPLY TO
ATTENTION OF

CESWL-CO-L (1130)

3 November 1994

MEMORANDUM FOR Commander, Southwestern Division

SUBJECT: Shoreline Management Plan for Greers Ferry Lake, Supplement No. 1

1. The purpose of this supplement is to make recommendations concerning updating the Shoreline Management Plan (SMP) for Greers Ferry Lake. The previous general review of shoreline allocations at Greers Ferry Lake was approved in August 1982.

2. Initial Review. The initial review of the Greers Ferry SMP included 13 rezoning requests which had been held in abeyance during the conversion of the lakeshore management plan to a shoreline management plan, or were received during the 1-year period following approval of the shoreline management plan on 16 Apr 93. The enclosed Site Evaluation Summary (Encl 1) includes maps showing the locations of rezoning requests and completed evaluation forms for each of these sites considered in this review.

3. Public Involvement. The following actions were used to notify and involve the public in the review and updating of this plan.

a. News releases to various media outlets were used to publicize the workshop. A letter and a copy of the news release were sent to all rezoning applicants to alert them to the opportunity to participate in the review process.

b. Congressional interests were notified on 17 Jun 94 of the time and date of the workshop and invited to attend. Senators Bumpers and Pryor and Congresswoman Lambert had staff members present at the workshop.

c. Eighty-seven (87) members of the public attended the workshop at the William C. Garner Visitor Center on 11 Jul 94. Representatives of the District Office and Greers Ferry Resident Office were present from 2 p.m. until 7 p.m. to answer questions and receive public input.

d. Written comments were accepted for 30 days following the workshop; the period ended on 11 Aug 94.

4. Recommendations for Updating the Greers Ferry SMP.

a. **Reallocation of Shoreline.** Based on an analysis of the rezoning requests, it is recommended that approximately 300 feet of shoreline, at 2 separate locations on the lake, be reallocated from protected areas to limited development areas (Encl 2 - areas are circled in red). This will allow 3 of the 13 rezoning requests (those meeting the required criteria) to be approved. Currently, the 276 shoreline miles on Greers Ferry Lake includes:

(1) Limited Development - 22 miles

(2) Protected - 204 miles

(3) Prohibited - 12 miles

(4) Park and Buffer areas - 38 miles

b. **Vegetation Modification.** Recommend the current mowing limit (buffer zone) be retained primarily based on the limited amount of Government land available and to ensure that "ALL" aspects of the operation of the project are properly maintained. It is crucial that an appropriate shoreline area be preserved for operational and environmental reasons.

(1) Most of the public comments received addressed the vegetation modification (50-Foot Mowing Limit) issue. Considerable interest was expressed on both sides.

(a) Retaining the Current 50 Foot Limit.

- Forty-four (44) of the letters received supported this position. Seven of the supporting letters represented various groups, organizations and agencies including:

-- U.S. Department of the Interior
-- Arkansas Game and Fish Commission
-- Heber Springs Chamber of Commerce
-- Fairfield Bay Communities
-- City of Heber Springs
-- Greers Ferry Lake & Little Red River Assn
-- Red Apple Enterprises

- There were 37 letters from individuals, most of whom identified themselves as lakeshore or area residents, expressing their support for retaining the current vegetation modification limit.

- Generally, the rationale for supporting the current limit can be summarized to protect the ecosystems and natural beauty of the lake.

(b) Increasing the Current Limit to 200 Feet.

- One petition asking to mow more public shoreline was presented by representatives of Eden Isle's Shady Cove Condominiums. There were 1,297 signatures on the petition. An additional 145 signatures were submitted for inclusion with the petition presented at the 11 Jul 94 workshop. This brought the total number of signatures on the petition to 1,442.

- Fourteen letters (14) were submitted in support of increasing the current vegetation modification limit. These persons identified themselves as lakeshore residents.

- There were no letters from groups, organizations or agencies expressing support for increasing the mowing limit at Greers Ferry Lake.

- The prevailing argument for increasing the limit was to bring Greers Ferry in line with other LRD lakes. Current limits for the other projects are:

-- Beaver	100 ft	-- Millwood	200 ft
-- Bull Shoals	200 ft	-- Norfork	100 ft
-- Dardanelle	200 ft	-- Table Rock	200 ft

(c) Other Comments.

- Two letters were received in support of very limited vegetation modification changes in the current plan.

- One letter was received concerning the validity of the petition submitted in favor of increasing the vegetation modification limits.

(2) Overall Land Impact. If the mowing limit was increased, the majority of the lake would be affected since the fee line is 200 feet or less from the water's edge at conservation pool elevation 461 for 85 percent of the shoreline.

Only a limited amount of shoreline was purchased for Greers Ferry Lake based on the Joint Land Acquisition Policy of 1953 (Eisenhower Criteria).

(3) Other Considerations.

(a) Water Supply.

- The buffer area plays a vital role in protecting water quality by minimizing and preventing runoff of various sediments and contaminants (fertilizers, pesticides, etc.) into the lake.

- There are currently three major water intake structures on the lake; Heber Springs, Clinton, and Community Water System; with a two stage expansion (enlarge the current structure and add a new intake facility at another location) planned for the Community System. This expansion will provide water to a large segment of the area between the lake and the cities of North Little Rock/Jacksonville.

(b) Fish and Wildlife. The vegetation both in the water and near the shoreline is used by various fish species for egg attachment during spawning and as a source of food and cover during high water.

(c) Vegetation. Shoreline buffer zone protects the banks from water and wind erosion and helps prevent injury to the aquatic plant environment from silt deposits. Mowed grass does not offer an equivalent erosion control to the tree and underbrush system that now exists on the shoreline.

(d) Geology. The geology (soils) of the lake is conducive to septic tank failures. This condition is due to the low permeability of the residual clay overburden and the shallow depth to bedrock. Septic tanks with draintile absorption fields normally do not function well in the lake area, especially when effluent loadings are significant. It is important, therefore, to retain all existing undisturbed forest humus, which does an excellent job of absorbing effluent from malfunctioning septic systems on adjacent private lands.

(4) In summary, the water and land areas at Greers Ferry Lake are currently being managed to ensure compliance with the specifically congressionally authorized flood control and power

generation purposes as well as providing water supply and recreational benefits to the general public. While development around the lake is increasing rapidly, the ownership of lands adjacent to the public shoreline areas does not convey any special rights or privileges to private individuals (SWDR 1130-2-7) and, therefore, should not subjugate the overall operation of the project.

Encls

DAVID R. RUF
Colonel, Corps of Engineers
Commanding

Copy Furnished:
Res Engr, Greers Ferry

WHITE RIVER WATERSHED
LITTLE RED RIVER
GREERS FERRY DAM AND LAKE

UPDATED MASTER PLAN FOR
DEVELOPMENT AND MANAGEMENT
GREERS FERRY LAKE
APPENDIX F
SHORELINE MANAGEMENT PLAN

TABLE OF CONTENTS

Paragraph No.	SUBJECT	Page No.
	SECTION I - INTRODUCTION	
1-01	Project Authorization	1
1-02	Purpose	1
1-03	Authority	1
1-04	References	1
1-05	Private Shoreline Uses	1
1-06	Master Plan	2
1-07	Additional Legislation	2
	SECTION II - OBJECTIVES OF THE PLAN	
2-01	General	3
2-02	Commercial Concessions	3
2-03	Limited Motels/Resorts/Campgrounds	3
2-04	Private Use	4
2-05	Background	4
2-06	Plan Conversion	4
2-07	Five-Year Review	5
	SECTION III - DESCRIPTION OF THE SHORELINE	
3-01	General	6
3-02	Shoreline	6
3-03	Present Land Use	6
3-04	Private Development	6
3-05	Existing Access	6
3-06	Private Boat Dock History	7
3-07	Indian Lands	7
3-08	Joint Jurisdiction	7
	SECTION IV - SHORELINE ALLOCATION	
4-01	General	8
4-02	Allocations	8
4-03	Shoreline Allocation Maps	9
4-04	Tramways	9
4-05	Mooring Buoys	9

TABLE OF CONTENTS

Paragraph No.	SUBJECT	Page No.
	SECTION V - SHORELINE USE PERMIT GUIDELINES	
5-01	General	10
5-02	Permits, Where Required	10
5-03	Permits, Authority to Issue	10
5-04	Permits, Administration Charge	10
5-05	Permit Term	10
5-06	Posting of Permit Number	10
5-07	Design of Private Floating Facilities	11
5-08	Tramways	11
5-09	Collection of Fees	11
5-10	Refund of Fees	11
5-11	Facilities Existing Under Special Conditions	11
5-12	Permit Revocation	11
	SECTION VI - CONSTRUCTION AND MAINTENANCE REQUIREMENTS FOR PRIVATE FLOATING FACILITIES	
6-01	Minimum Design Standards	13
6-02	Inspections	13
6-03	Flotation	13
	SECTION VII - OTHER SHORELINE USES BY INDIVIDUALS	
7-01	Private Use of the Shoreline	14
7-02	Conditions	14
7-03	Vegetation Modification	14
7-04	Use of Chemicals For Vegetation Modification	15
7-05	Fees	15
	SECTION VIII - PERMITS	
8-01	Shoreline Use Permits	16
8-02	Department of the Army Permits	16
8-03	Real Estate Instruments	16
8-04	Boat Permits and Health Permits	16
8-05	Restrictions on Boats with Sleeping Quarters and/or Marine Sanitation Devices	16
	SECTION IX - OTHER LAND USES	
9-01	Project Lands	18
9-02	Adjoining Lands	18
	SECTION X - CONCLUSIONS AND RECOMMENDATIONS	
10-01	Matters Not Addressed	19
10-02	Conclusions	19
10-03	Review	19
10-04	Recommendation	19

TABLE OF CONTENTS

LIST OF EXHIBITS

Exhibit I	Shoreline Allocation Maps
Exhibit II	SWLOM 1130-2-33
Exhibit III	36 CFR 327.30
Exhibit IV	Tramway Requirements
Exhibit V	Greers Ferry Lake Notice and Instructions on Use of All Boats with Sleeping Quarters and/or Marine Sanitation Devices
Exhibit VI	A Guide to Shoreline Use - Greers Ferry Lake
Exhibit VII	Packet for Private Boat Dock Applicants
Exhibit VIII	Suppliers of Coated and Extruded Polystyrene Flotation Materials - Greers Ferry Lake
Exhibit IX	Areas Zoned for Community Docks Only

THIS PAGE WAS
INTENTIONALLY LEFT BLANK

WHITE RIVER WATERSHED
LITTLE RED RIVER
GREERS FERRY DAM AND LAKE

UPDATED MASTER PLAN FOR
DEVELOPMENT AND MANAGEMENT
GREERS FERRY LAKE
APPENDIX F
SHORELINE MANAGEMENT PLAN

SECTION I

INTRODUCTION

1-01. Project Authorization. The Greers Ferry Dam and Lake project was authorized by the Flood Control Act of 28 June 1938 (Public Law 761, 75th Congress, 3rd Session), as modified by the Flood Control Act approved 18 August 1941 (Public Law 228, 77th Congress, 1st Session), to include the authorization of the project for flood control and generation of hydro-electric power.

1-02. Purpose. The Shoreline Management Plan establishes policy and furnishes guidelines for the protection and preservation of the desirable environmental characteristics of the Greers Ferry Lake shoreline. The shoreline consists of all Government lands and flowage easement at Greers Ferry Lake. The plan also considers means of shoreline restoration where degradation has occurred because of private exclusive use.

1-03. Authority. The Shoreline Management Plan was prepared in accordance with the requirements and criteria contained in ER 1130-2-400 and 36 CFR 327.30.

1-04. References. The Shoreline Management Policy of the Little Rock District is outlined in SWLOM 1130-2-33, dated 15 September 1992.

1-05. Private Shoreline Uses. Private recreation facilities as discussed in this plan include boat moorage facilities, ski jumps, and other private floating recreation facilities. Private floating facilities used for boat mooring will not exceed the minimum size required to moor the owner's boat or boats plus a minimum area for storage of oars, life preservers, and other items essential to the operation of watercraft. An individual may have a maximum of two slips in any new dock. Valid state boat registration will be necessary to verify slip needs. An individual may have only one of the following items to preclude usurpation of the shoreline. The applicant may have either:

a. A permit for a private floating facility.
b. Ownership of a slip in a community dock.
c. A Real Estate instrument for a tramway.

Private floating facilities will not be used for human habitation. Private floating facilities will not be enclosed to assure that items conducive to human habitation are not installed. Sundecks, swim docks, and/or diving boards are prohibited. Maximum size of community docks at Greers Ferry is 20 stalls.

1-06. Master Plan. Upon approval, this updated Appendix will become a part of the Updated Master Plan for Greers Ferry Lake.

1-07. Future Legislation. This plan will incorporate any future legislation, regulations, policies, etc., pertinent to Corps of Engineers Civil Works projects and/or Greers Ferry Lake.

SECTION II

OBJECTIVES OF THE PLAN

2-01. General. It is the policy of the Chief of Engineers to protect and manage shorelines of all Civil Works water resource development projects under Corps jurisdiction in a manner which will promote the safe and healthful use of the shoreline by the public while maintaining environmental safeguards to ensure a quality resource by the public. The objectives of all management actions will be to achieve a balance between permitted private uses and resource protection for general public use. Experience has shown that management is necessary to prevent large sections and possibly all of the shoreline from becoming congested with private floating facilities and/or private exclusive uses and thereby lost for public use and enjoyment. Management of the shoreline will provide an opportunity for optimum recreational experiences for the maximum number of people and assure compatibility between the recreating public, the environment, and project resources. The objectives of this plan are to manage and protect the shoreline, to establish and maintain acceptable fish and wildlife habitat, esthetic quality and natural environmental conditions and to promote the safe and healthful use of the lake and shoreline for recreational purposes by all Americans. Boat owners will be encouraged to moor their boats at commercial marinas, utilize dry storage facilities off project lands, or trailer their boats to public launching ramps located within the Corps parks or to one of the outgranted public launch areas.

2-02. Commercial Concessions. Floating facilities used in conjunction with commercial concessions located in the parks are not affected by this plan. These commercial operations are effectively controlled under existing Real Estate regulations. The services and storage facilities provided by these commercial operations will reduce the need for individually owned docks along the shoreline.

2-03. Limited Motels/Resorts/Campgrounds. Floating facilities used in connection with limited motel/resort/campground leases are subject to the shoreline allocations presented in this plan. Due to the economic impact on existing motel/resorts that already have docks for bona fide guests, these leases may be renewed to the present owner or transferred to the next owner, and the floating facilities serving these operations may remain moored at their present locations even though they may not be in an area currently designated for limited development. Expansion or major repairs of existing docks serving these motels and resort leases in areas not approved for limited development will be considered on a case-by-case basis.

2-04. Private Use. Ownership of private land does not convey any exclusive rights to the use of the adjoining public lands. It is the objective of this plan to manage permitted activities on public property to the degree necessary to gain maximum benefit for the general public. As stated previously, the objectives of all management actions will be to achieve a balance between permitted private uses and resource protection for general public use.

2-05. Background. The initial Lakeshore Management Plan for Greers Ferry Lake was approved by the District Engineer on 7 October 1974. This plan was subsequently reviewed, updated with public involvement, and approved by the Division Engineer, Southwestern, in February 1976. This plan was reviewed, updated with additional public involvement and approved by the Division Engineer, Southwestern, in October 1982. Subsequent assessments of the plan have not revealed any significant changes in use patterns that would warrant further updating the plan.

2-06. Plan Conversion. Revision of 36 CFR 327.30 in 1990 required the Little Rock District to convert its currently approved lakeshore management plans to shoreline management plans. The District's draft operating policy for shoreline management was made available for public review and comment in May 1991. The provisions of the finalized policy, SWLOM 1130-2-33, and the shoreline allocations contained in the October 1982 approved lakeshore management plan have been include in this Shoreline Management Plan for Greers Ferry Lake. Additional public workshops were not conducted as part of the conversion process for the Greers Ferry plan for the following reasons:

a. The official shoreline allocation maps on display at the resident office and reproduced as an exhibit in the currently approved lakeshore management plan were developed with public involvement. Changes to existing shoreline allocations will not be considered during the conversion process; therefore, additional public involvement was not necessary.

b. The conditions of the shoreline use permit, including the flotation and electrical certification requirements, were subject to public review and comment on a national scope when 36 CFR 327.30 was being revised in 1988. Its publication as a final rule on 27 July 1990 mandated the inclusion and use of these conditions and requirements, as revised, in the shoreline management plans prepared in the District.

c. The Little Rock District's shoreline management policy, SWLOM-1130-2-33, was approved 15 September 1992 following a series of public workshops and consideration of the written comments received following the public involvement opportunities.

The Shoreline Management Plan as presented in this appendix reflects the best balanced use of the shoreline based on current and anticipated public use and needs.

2-07 Five-Year Review. Shoreline management plans will be reviewed at least once every 5 years. The plan may be supplemented more frequently should regulations, project operations, project conditions, or management objectives change significantly. The District Engineer may approve minor administrative revisions to the plan when the revisions are consistent with ER 1130-2-406 or 36 CFR 327.30. The addition or deletion of limited development areas are not minor revisions. Revisions of this nature will require public involvement and approval by the Division Engineer.

SECTION III

DESCRIPTION OF THE SHORELINE

3-01. General. Greers Ferry Lake is located in the foothills of the Ozark Mountains in northcentral Arkansas. The area is generally wooded and rugged with interesting geological formations overlooking the winding Little Red River. The lake has an irregular shape with numerous arms and coves. The steep bluff formations on both sides of the central portion of the lake form a straight channel or narrows that in effect form two bodies of water. The prominent scenic topographic features of the area include oddly shaped buttes and ledge outcrops that rise above the river valley. At some of the coves in the upper end of the lake, the terrain is less steep and waters are subject to rapid dewatering with only a moderately lower pool stage.

3-02. Shoreline. At top of conservation pool, El 461, the shoreline of the lake has a total length of 276 miles. As the pool rises to the top of the flood control pool, El 487, the shoreline length increases to 343 miles.

3-03. Present Land Use. The Greers Ferry Project contains 45,548 acres of land and water. There are 40,914 acres owned in fee and 4,634 acres are managed by flowage easement. The acreage managed by flowage easement is located within the flood control pool. Approximately 40,500 acres of the total project acreage are within the flood control pool. A portion of this acreage is dually allocated as Project Operations/Recreation-Intensive Use. There are 2,864 acres allocated exclusively for Recreation-Intensive Use and 66 acres exclusively for management of fish and wildlife above the flood control pool elevation.

3-04. Private Development. The area around Greers Ferry Lake is a popular vacation and retirement area. This is evident by the fact that there are over 200 subdivisions adjoining Government ownership. Approximately 30 percent of the lots in these subdivisions have been developed.

3-05. Existing Access. The waters of Greers Ferry Lake are easily accessible to recreational boaters and the adjoining property owners alike. In addition to the 59 launching lanes located in the parks, 23 severed roads around the lake are also used by residents and sportsmen for boat launching. Twenty-four rights-of-way have been granted to local county governments for the construction of public launching ramp complexes. Many of these complexes, consisting of an access road, parking area, and launching ramp are located adjacent to subdivision developments. Rights-of-way have been granted to 25 adjoining landowners for the construction of tramways to provide them access to the waters of the lake. Ninety-three permits for pedestrian access paths have been issued.

3-06. Private Boat Dock History. Private boat docks have been permitted on Greers Ferry Lake since impoundment began in January, 1961. The number of private floating facilities on the lake has continued to increase since that time. The following tabulation indicates the number of docks on the lake:

Year	Private Floating Facilities
1968	125
1969	140
1970	152
1971	155
1972	176
1973	162
1974	162
1975	162
1976	162
1977	165
1978	168
1979	175
1980	179
1981	180
1982	179
1983	182
1984	187
1985	185
1986	186
1987	186
1988	188
1989	194
1990	195
1991	200
1992	204

3-07. Indian Lands. There are no Indian lands within the boundaries of the Greers Ferry Lake Project.

3-08. Joint Jurisdiction. No other Federal agencies have jurisdiction over administration of the shoreline covered by this plan.

SECTION IV

SHORELINE ALLOCATION

4-01. General. Increased development of adjoining private land increases the demand for private floating facilities; therefore, it is readily apparent that a plan for systematic development of the shoreline is essential. This approach is intended to protect the natural beauty of the shoreline and to balance use to maximize use of the shoreline by the most people.

4-02. Allocations. Shoreline allocations extend from the water's edge to the project boundary for land-based uses and from the shoreline waterward for floating facility considerations. The classifications are delineated on the "Official Map" conspicuously displayed or readily available for viewing at the Resident Office. No changes will be made to the Official Map except through the formal updating process. The entire shoreline will be allocated within one of the following classifications.

a. Limited Development Areas. These areas are shown in red on the shoreline allocation maps. Approximately 7 percent of the shoreline at the top of the conservation pool, El. 461, is designated for limited development. Private facilities and/or activities including vegetation modification for fire protection only, and foot-path construction are allowed.

(1) Private floating facilities are permitted in areas designated for limited development. The density of development will depend upon and be consistent with the ecological and esthetic characteristics of the particular area. The density of development will not exceed 50 percent of the shoreline allocated for limited development when the lake level is at the top of conservation pool. Density will be determined by measuring linear feet of shoreline in the zone and comparing it to the width of the facilities.

(2) Generally the number of docks that will be permitted in an area will be limited by spacing a minimum of 100 feet apart in ideal shoreline conditions. The Resident Engineer will assess conditions and consider designating the zone for community docks only when the number of docks in a given zone reaches 50 percent of the estimated capacity of that zone (at conservation pool elevation) or when development and/or growth patterns indicate high demand potential for mooring facilities. Compatibility with existing docks and adequacy of access roads and parking facilities will be considered before designating a zone for community docks only. Descriptions of the specific areas designated for community docks only are included in Exhibit IX.

(3) All United States citizens have an equal opportunity to moor a dock in a limited development area provided the area has not reached the maximum density of development. The applicant must have ready access (within 200 feet) across adjoining property. Dock owners who are not permanent residents of the area must designate a local party who will be responsible for surveillance over their dock on a 24-hour basis.

b. Public Recreation Areas. Public recreation areas and adjoining buffer areas are shown in green on the shoreline allocation maps. Private shoreline use facilities or activities are not permitted within designated or developed recreation areas or their adjoining buffer areas.

c. Protected Shoreline Areas. The shoreline allocation maps do not designate these areas with a color code. Shoreline use permits will not be issued for floating facilities in these zones. Vegetative modification for fire protection only, and foot path construction may be permitted in these areas. The Resident Engineer must determine that the requested land use will not adversely impact the environment or physical characteristics of the zoned area prior to issuing the shoreline use permit.

d. Prohibited Access Areas. Prohibited access areas are shown in blue on the shoreline allocation maps. No shoreline use permits will be issued in prohibited access areas. These areas typically include hazardous zones near dams, spillways, hydroelectric power stations, or water intake structures. Public access is not allowed for health, safety, or security reasons.

4-03. Shoreline Allocation Maps. Maps showing the shoreline allocations are included as Exhibit I of this Appendix. A master map of the shoreline is on display at the Greers Ferry Resident Office 3 miles north of Heber Springs, Arkansas, on state highway 25. The master map shows further designations within the protected and prohibited shoreline areas; i.e., scenic, shallow, natural, etc.

4-04. Tramways. Placement of tramways will be subject to the same shoreline allocations as private floating facilities. Tramway requirements are discussed in Exhibit IV of this Appendix.

4-05. Mooring Buoys. Mooring buoys are not allowed at Greers Ferry Lake except at commercial marinas.

SECTION V

SHORELINE USE PERMIT GUIDELINES

5-01. General. Guidelines for Shoreline Use Permits are contained in SWLOM-1130-2-33, dated 15 September 1992 (Exhibit II).

5-02. Permits, Where Required. Revocable shoreline use permits may be granted for private floating facilities, mooring buoys, ski jumps, vegetative modification for fire protection only, and/or path construction where such activities conform to the shoreline management plan and/or land use allocations of the project Master Plan. An individual may be issued a permit for only one of the following: a private boat dock, two slips in a community boat dock, or a boat tramway license. Only one of these facilities will be authorized to the same individual to preclude undue usurpation of the shoreline.

5-03. Permits, Authority to Issue. The Resident Engineer is authorized to issue shoreline use permits. ENG Form 4264-R, Application for Shoreline Use Permits will be used (Exhibit II, Appendixes B and C). Construction may proceed upon receipt of written approval of the plans by the Resident Engineer. Detailed procedures are listed in Exhibit VII.

5-04. Permit, Administration Charge. A charge will be made for shoreline use permits to help defray expenses associated with issuance and administration of the permits. The administration charge of $10 for each permit and an additional $5 annual inspection fee for private floating facilities will be collected initially at the time of permit issuance rather than on a piecemeal annual basis. Charges currently in effect are subject to changes in future years. There will be no annual inspection fee for vegetative modification permits.

5-05. Permit Term. Shoreline use permits are issued for a term of 5 years but are subject to revocation by the District Engineer whenever he determines that the public interest requires such revocation or the permittee fails to comply with the conditions of the permit.

5-06. Posting of Permit Number. Two printed display permit tags approximately 6 by 8 inches in size, bearing the permit number and expiration date will be furnished with each permit issued. These tags will be posted on the floating facility and/or the land area covered by the permit in accordance with instructions provided by the Resident Engineer. Grandfathered facilities are identified with either a green tag or an "X" preceding the permit number.

5-07. Design of Private Floating Facilities. Two copies of the plans and specifications for the proposed facility and a site plan identifying any land based support facilities will be submitted to the Greers Ferry Resident Engineer for review and approval. Facilities must meet the Minimum Construction and Maintenance Requirements for Private Floating Facilities outlined in Exhibit II, Appendix G. The plans must be approved by the Resident Engineer. The permit will be issued following construction and final inspection.

5-08. Tramways. The Resident Engineer will forward all requests for tramways with recommendations concerning approval through the Chief, Construction-Operations Division, and Chief, Engineering Division, to the Chief, Real Estate Division. Tramways will be used to transport only boats and related equipment. Use of tramways to transport individuals is not permitted on Greers Ferry Lake. All construction plans shall conform to the requirements shown in Exhibit IV.

5-09. Collection of Fees. Payment may be made by check (personal, certified, cashiers, etc.) or money order made payable to the Finance and Accounting Office, U.S. Army, Little Rock District. Payment may also be made in cash. Cash collections will be acknowledged by issuance of a receipt. Revenue from issuance of shoreline use permits will be collected by employees authorized to collect for petty cash sales. Collections will be sent to the Finance and Accounting Office, Tulsa District Office, using ENG Form 3313, Remittance Register. Collections identified as "shoreline use permits" may be listed on the same schedules as lake maps, folder maps, etc.

5-10. Refund of Fees. Fees for shoreline use permits are nonrefundable.

5-11. Facilities Existing Under Special Conditions. The plan will consider existing permitted facilities and prior written commitments. Approved facilities and/or activities outside of limited development areas will be grandfathered. Green permit tags or an "X" preceding the permit number on regular permits will be used to designate facilities and activities being allowed under special conditions and to set them apart from other facilities and/or activities. Special provisions also apply to the removal of grandfathered facilities or activities lawfully installed and under permit as of 29 December 1981 or 17 November 1986. Procedures regarding removal of these facilities as provided for in PL 97-140 and PL 99-662 are outlined in paragraph 8 of ER 1130-2-406.

5-12. Permit Revocation. Authority to revoke shoreline use permits rests with the District Engineer. Permits may be revoked when the action is in the public interest or when the permittee fails to comply with the terms of the permit, the Shoreline Management Plan, or ER 1130-2-406. Conditions must be carefully

and completely documented with copies of certified correspondence to the permittee, dated photographs and detailed inspection reports when recommending permit revocation to the District Engineer. The permittee notification process is outlined in permit condition 26 (Exhibit II, Appendix C).

SECTION VI

CONSTRUCTION AND MAINTENANCE REQUIREMENTS FOR PRIVATE FLOATING FACILITIES

6-01. Minimum Design Standards. Standards for private floating facilities are listed in Exhibit II. Plans must be approved by the Resident Engineer. Additionally, Exhibit VII provides guidance, requirements and has a checklist for private boat dock applicants at Greers Ferry Lake. Electric service to private docks must follow approved plans and meet the requirements of all local and state codes as well as the National Electric Code and Exhibit II. A registered master electrician or registered electrical engineer must certify to the Resident Engineer, in writing, that the facility's electric service meets or exceeds Corps specifications, state and local codes, and the National Electric Code. A Packet for Private Boat Dock Applicants, Greers Ferry Lake (Guidance/Requirements) is enclosed as Exhibit VII.

6-02. Inspections. Initial and subsequent annual inspections will be performed to assure dock is maintained in accordance with approved plans.

6-03. Flotation. Flotation for private boat docks at Greers Ferry must conform to specifications listed in 36 CFR 327.30 and SWLOM-1130-2-33. No beaded foam flotation is allowed at Greers Ferry Lake unless it is encased in an approved protective covering. A list of suppliers of approved flotation is included in Exhibit VIII.

SECTION VII

OTHER SHORELINE USES BY INDIVIDUALS

7-01. Private Use of the Shoreline. All individuals desiring to perform vegetative modification must obtain a permit from the Resident Engineer. Only limited activities (paths, fire protection) are allowed. Permits will not be granted to individuals for use of lands allocated as public recreation areas, including their buffers, or on lands allocated as prohibited access areas.

7-02. Conditions. Shoreline Use Permits for vegetative modification are granted for a term of 5 years, renewable at the option of the Resident Engineer, and subject to revocation at any time for conditions such as erosion, littering, or other abuses and violations of permit conditions, which would adversely affect the environment of the project. Future revisions of present rules may also necessitate revocation of permits. The following conditions apply to these vegetative modification permits:

a. This permit constitutes authority to perform only the specific scope of work detailed in the permit.

b. All paths or mowing will be laid out with on-site supervision and approval of the Resident Engineer or his representative.

c. Paths are limited to a maximum of 6 feet in width and must meander to help prevent erosion and avoid tree removal. Excavation and filling on Government land (and flowage easement) are prohibited. No structures (steps, bridges, etc.) may be constructed in conjunction with paths covered by these permits.

d. Vegetation will not be removed except as specifically approved on the site and noted on the permit. Trimming of trees for any reason is prohibited.

e. Refuse is to be removed from Government land. Burning on Government land is not permitted.

f. Only hand operated tools and noncommercial lawn mowers may be used on Government land. The use of heavy equipment such as tractors and bulldozers is not permitted.

g. All work will be accomplished without cost or liability to the Government.

7-03. Vegetation Modification. Mowing of the shoreline will be permitted for fire protection only. The limits of the mowing will be dependent on the proximity of privately-owned dwellings and outbuildings to the Government boundary. A maximum mowed

radius of 50 feet from habitable structures is considered adequate. The limits of mowing in each case will be determined by the Resident Engineer and defined on the shoreline use permit.

7-04. Use of Chemicals for Vegetation Modification. Use of chemicals for vegetation modification is not allowed on Greers Ferry Lake.

7-05. Fees. An administrative fee of $10 will be made for shoreline use permits for vegetation modification and/or path construction. No annual inspection fees will be charged for these permits. Permit fees are nonrefundable.

SECTION VIII

PERMITS

8-01. Shoreline Use Permits. Shoreline use permits are issued for private floating recreation facilities, access paths, and mowing for fire protection which do not in any way involve a disruption to or a change in land form. All of these permits will be nontransferable, and fees charged for these permits are nonrefundable. Upon sale of the permitted facility or death of the permittee, the permit is null and void. A new permit may be issued to the new owner after an application has been made and administrative charges and inspection fees have been paid.

8-02. Department of the Army Permits. Activities such as dredging, construction of fixed structures, including fill and combination fixed-floating structures, and the discharge of dredged or fill material in navigation waters will be permitted under conditions specified in permits issued under authority of Section 10, River and Harbor Act of 3 March 1899 (33 USC 403) and Section 404 of the Federal Water Pollution Control Act (33 USC 1344). Shoreline use permits will not be issued under these circumstances. These activities are prohibited for private individuals at Greers Ferry Lake.

8-03. Real Estate Instruments. All commercial development activities and all activities by individuals which are not covered above and appropriate land-based support facilities required for private floating facilities such as roads, powerlines, and tramway rights-of-way will be covered by a lease, license, or other outgrant.

8-04. Boat Permits and Health Permits. In order for the public to enjoy the recreational resources of Greers Ferry Lake, consideration must be given to maintaining high standards of public health and water quality. The regulations contained in Title 36 CFR as established by the Corps of Engineers and also those of the Arkansas Department of Health are necessary to maintain the waters of Greers Ferry Lake as among the cleanest in the nation. A Corps of Engineers boat permit and numbered decals must be obtained for any craft placed on the lake for any period exceeding 3 days. Applications can be obtained at the Greers Ferry Resident Office (501-362-2416), 8:00 a.m. to 4:00 p.m., Monday - Friday.

8-05. Restrictions on Boats with Sleeping Quarters and/or Marine Sanitation Devices. The Greers Ferry Lake Notice, Instructions on Use of All Boats With Sleeping Quarters and/or Marine Sanitation Devices (Exhibit VI) applies to all boats with sleeping quarters and/or boats with marine sanitation devices. Since Greers Ferry has been classed as a "No Discharge" lake, only U.S. Coast Guard certified Marine Sanitation Devices are allowed. The discharge of any type effluent in the waters or

lands of Greers Ferry Lake is prohibited. The use or possession of any type Marine Sanitation Device other than a U.S. Coast Guard approved "No Discharge" type is prohibited on boats operated on Greers Ferry Lake. All Marine Sanitation Devices must be capable of being pumped out only at Marine Dump Stations located at Dam Site, Eden Isle, Heber Springs, Shiloh, Van Buren, and Choctaw Marinas on Greers Ferry Lake.

SECTION IX

OTHER LAND USES

9-01. Project Lands. Sanitary facilities within the developed parks consist of restrooms with masonry vault holding tanks, septic tanks and disposal fields, or sewage treatment plants. Sanitary dump stations with holding tanks or disposal fields are provided for recreational vehicles in parks. Marine dump stations with holding tank are provided at Heber Springs Marina, Fairfield Bay Marina, Shiloh Marina, Eden Isle Marina, Dam Site Marina, and Choctaw Marina. Sewage disposal methods and facility designs are in accordance with applicable Arkansas Department of Health and Environmental Protection Agency requirements. There are no sanitary landfills or sanitary sewage disposal facilities on the Greers Ferry Lake project.

9-02. Adjoining Lands. Septic tanks and other sanitary facilities constructed on adjoining private land are subject to inspection and approval of the Arkansas Department of Health. Any evidence that these facilities are not functioning properly is reported to the Arkansas Department of Health for investigative action and corrective action.

SECTION X

CONCLUSIONS AND RECOMMENDATION

10-01. Matters Not Addressed. Requests for activities not specifically addressed in the shoreline management plan will be sent to the Chief, Construction-Operations Division, for review, coordination, approval, or referral to higher headquarters.

10-02. Conclusions. The shoreline management plan presented in this Appendix is considered to provide the greatest recreational benefit to all the public and to balance bona fide recreational needs against the physical limitations and esthetic qualities of the lake, its natural resources, and surrounding lands. The plan has taken into consideration both the present and future recreational needs of the area.

10-03. Review. The shoreline management plan presented in this Appendix is a flexible and working document. The Resident Engineer/Manager will continually monitor the needs of the recreational users of the lake and recommend revisions that will minimize conflicts between various interests. Additional public review/coordination with District staff will be conducted in advance of recommending/implementing major revision to this plan.

10-04. Recommendation. Approval of this plan is recommended.

THIS PAGE WAS
INTENTIONALLY LEFT BLANK

US Army Corps
of Engineers
Little Rock District

SHORELINE MANAGEMENT
ALLOCATION MAPS

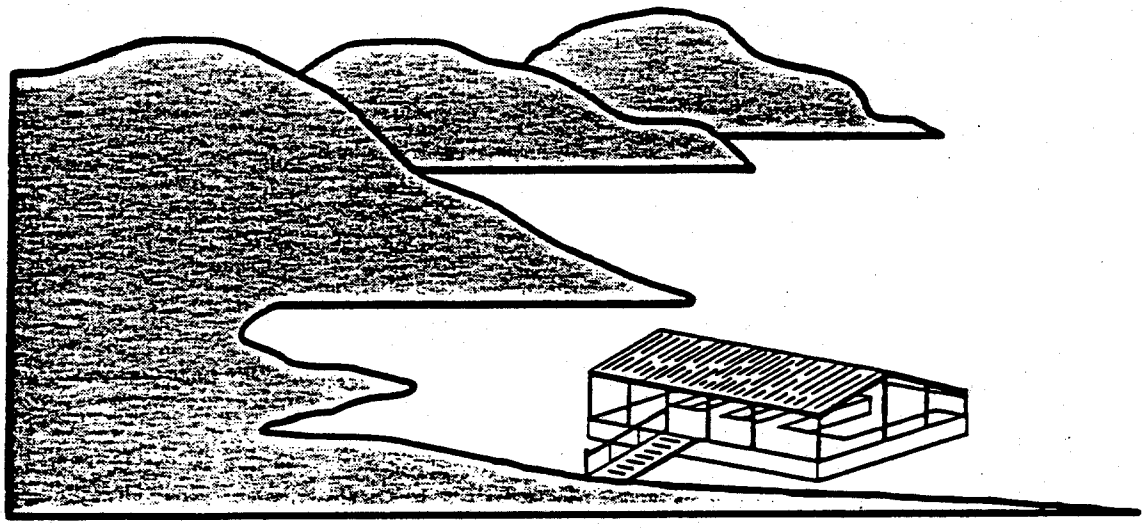

EXHIBIT I

CESWL-CO-L DEPARTMENT OF THE ARMY SWLOM 1130-2-33
Little Rock District, Corps of Engineers
P.O. Box 867
Little Rock, Arkansas 72203-0867

Office Memorandum 15 September 1992
No. 1130-2-33

Project Operations
SHORELINE MANAGEMENT AT CIVIL WORKS PROJECTS

1. Purpose. This memorandum provides specific policies and procedures regarding shoreline management activities required on projects in the Little Rock District.

2. Applicability. This memorandum applies to all water resource development projects in the Little Rock District.

3. References.

a. 36 CFR 327.30 published 27 July 1990.

b. ER 1130-2-406 dated 31 October 1990.

4. Policy.

a. Resident Engineers/Managers will protect and manage the shoreline of the water resource development projects under their jurisdiction. They will promote the safe and healthful use of the shoreline by the public while maintaining environmental safeguards to ensure a quality resource for future public use. Public pedestrian access to, from, and along these shorelines will be preserved.

b. Shoreline Management Plans will be developed for Beaver, Bull Shoals, Dardanelle, Greers Ferry, Millwood, Norfork, and Table Rock Lakes. These plans will consider the provisions of the currently approved lakeshore management plans which were prepared to address shoreline uses related to mooring of private floating facilities (boat docks) and related activities. The lakeshore management plans provide for a balance between private use and resource protection, and they were periodically reviewed and updated to reflect local norms and conditions. For this reason, the lakeshore management plans will serve as a basis for developing the Shoreline Management Plans required by ER 1130-2-406.

This memorandum rescinds LRDOM 1130-2-11 dated 28 May 1985, LRDOM 1130-2-15 dated 10 March 1986, and LRDOM 1130-2-18 dated 25 June 1987.

Exhibit II

c. Current policy statements for Blue Mountain, Clearwater, DeQueen, Dierks, Gillham, Nimrod, and Ozark Lakes will be reviewed and any authorized shoreline uses addressed. Since there were no private floating facilities (boat docks) on these lakes as of 13 December 1974, none will be permitted in the future.

d. Policy statements will be developed for Navigation Pools 1,2,3,4,5,6,7,8,9 and 13. Private shoreline uses will not be permitted on any of the lands owned in fee on these projects. Private uses of other portions of the shoreline of these projects may require a Section 10 or Section 404 Department of the Army Permit.

e. The currently approved lakeshore management plans and/or policy statements will remain in effect until the Shoreline Management Plans and updated policy statements have been approved by the Division Engineer, Southwestern.

f. The size, configuration, and anchoring plan for docks will be approved by the Resident Engineer/Manager. The maximum size of private floating facilities, including community docks, will be 20 slips for safety reasons and to assure maneuverability of the dock during periods of pool fluctuation. Docks should not extend out from the shore more than one-third of the cove width at conservation pool elevation. Existing docks larger than 20 slips will be grandfathered if safely maintained and shoreline is not needed for a higher purpose.

g. An individual may have a maximum of two slips in any new dock. Valid state boat registration will be necessary to verify slip needs. An individual may have only one of the three following items to preclude usurpation of the shoreline. The applicant may have either:

(1) A permit for a private floating facility.
(2) A permit for a mooring buoy.
(3) Ownership of a slip in a community dock.

h. The Little Rock District encourages the use of community boat docks as a means of limiting the proliferation of individual docks on the project. The following items will be considered when granting permits for community boat docks:

(1) The permit for a community dock will be issued to the person designated in an association agreement, or similar document, as the authorized representative for the slip owners in the dock. Valid boat registrations will be used to verify slip occupancy/ownership. Evidence must be furnished with the application assuring that the community dock association agreement and contracts for slip ownership have been notarized and filed with the county clerk. See Appendix E.

(2) The Resident Engineer/Manager will assess conditions and consider designating the zone for community docks only when the number of docks in a given zone reaches 50 percent of the estimated capacity of that zone (at conservation pool elevation) or when development and/or growth patterns indicate high demand potential for mooring facilities. Compatibility with existing docks and adequacy of access roads and parking facilities will be considered before designating a zone for community docks only.

i. Underground electrical service lines are encouraged, but in consideration of rocky terrain, soil conditions, and pool fluctuation, excavation may be determined to be impractical. Under these restrictive conditions, overhead electrical lines will be permitted. Electrical service lines must meet all applicable electrical codes, regulations, and clearance requirements. In those states where electricians are licensed, registered or otherwise certified, a copy of the electrical certification (Appendix F) must be provided to the Resident Engineer/Manager before a Shoreline Use Permit can be issued or renewed. In states where electricians are not licensed, registered or otherwise certified, the electrical certification form may be furnished by an electrical contractor.

j. Docks will be spaced a minimum of 100 feet apart. This distance, measured at the conservation pool elevation, will provide increased fire protection, personal privacy, shoreline aesthetics, fishing access, and general recreational use. The open space will also facilitate frequent maintenance of docks, cables, stiff-arms, and related features of the dock. Sufficient open space will be maintained for simultaneous maneuvering of swimmers and several watercraft in a safe manner. Lesser spacings that have been previously approved will be grandfathered.

k. The facilities in limited development areas will not occupy more than 50 percent of the total shoreline bearing that designation. Density will be determined by measuring linear feet of shoreline in the zone and comparing it to the width of the facilities.

l. Adjacent landowners at Beaver Lake, Bull Shoals Lake, Lake Dardanelle, Greers Ferry Lake, Millwood Lake, Lake Norfork and Table Rock Lake must obtain a permit from the Resident Engineer/Manager prior to modifying the vegetative characteristics of project lands. This requirement applies to mowing and/or removal of grasses, shrubs, and small trees. Permits for vegetative modification will not be granted to individuals in areas designated as public recreation areas, including buffers, or on lands allocated as prohibited access areas. Vegetative modification is subject to the following conditions:

(1) Only hand-operated tools and noncommercial riding lawn mowers may be used. The use of heavy equipment, such as tractors or bulldozers, is not permitted.

(2) Only dead or diseased trees previously inspected by the Resident Engineer/Manager or his representative may be cut. Any felled trees must be removed from project lands for disposal. No burning by individuals will be allowed on project lands.

(3) Healthy trees, larger than 2 inches in diameter (measured at chest height), may not be removed. Flowering trees or shrubs, such as dogwood or red buds, may not be cut regardless of their size. Trimming of healthy trees to obtain a view is prohibited. In certain cases, the Resident Engineer/Manager may restrict the cutting of trees less than 2 inches in diameter if it is determined it would create an erosion problem or similar adverse impact.

(4) The limits of vegetation modification are dependent on the proximity of habitable structures to the project boundary. Maximum allowable limits of vegetation modification are tabulated below:

Beaver	100 feet
Bull Shoals	200 feet
Dardanelle	200 feet
Greers Ferry	50 feet
Millwood	200 feet
Norfork	100 feet
Table Rock	200 feet

The actual limits of vegetation modification in each case will be determined by the Resident Engineer/Manager, or his representative, and defined on the shoreline use permit.

(5) Shoreline use permits may be issued to authorize pedestrian access paths from adjoining private property to the shoreline. These paths must follow meandering routes to reduce erosion and to minimize the need for removal of grasses, shrubs and small trees (less than 2 inches in diameter measured at chest height). It is recognized that paths constructed to blend into their natural surroundings will, by necessity, vary in width depending on physical conditions along the meandering path route. Pedestrian access paths to the shoreline should not exceed 6 feet in width, measured at their widest point(s). The shoreline use permit does not convey the right to construct any structures, such as bridges of steps, in connection with the path. If structures such as bridges or steps are proposed, a real estate outgrant will be required and must be obtained before any work is started.

(6) There may be reaches of the shoreline that are popular areas for public use or have potential for public use. Many of these areas have been kept mowed by the adjacent landowners and it may be in the best interest of the general public to allow this practice to continue at those locations where substantial public use is made possible in part by the clearing and mowing. The Resident Engineer/Manager, or his representative, will consider each case on an individual basis. The shoreline use permit issued for this purpose will contain the added condition that, "All lands covered by this permit will remain open at all times for use by the general public."

(7) Requests for shoreline improvements involving landscaping activities must be accompanied by a detailed or well-designed landscape plan. The plan will provide for better management of the area for the enhancement of wildlife propagation, protection of the aesthetics and prevention of erosion.

5. Shoreline Management Plans.

a. Preparation and Approval. A Shoreline Management Plan will be prepared for each project where private floating facilities (boat docks) and/or other private shoreline uses are permitted. The plan will be prepared as a separate document, and it will become a part of the Operational Management Plan (OMP) after approval by the Division Commander. There will NOT be a moratorium on accepting applications during the Plan development and approval period.

b. Scope and Format. The Shoreline Management Plan will include the following detail items:

(1) Maps illustrating shoreline allocations by color code.
(2) Related rules and regulations.
(3) Discussion of permitted private uses.
(4) Permit application procedures.
(5) Permit revocation procedures.
(6) Provision for specific management adjustments, including:
(a) Unique lake characteristics which limit application of standards.
(b) Project land acquisition policy.
(c) Community docks only requirements.
(d) Other project specific conditions which may arise.

c. Matters Not Addressed. Requests for activities not specifically addressed in the Shoreline Management Plan will be sent to the Chief, Construction-Operations Division, for review, coordination, approval, or referral to higher headquarters.

d. Shoreline Allocation. These allocations extend from the water's edge to the project boundary for land-based uses and from the shoreline waterward for floating facility considerations. The classifications will be delineated on the "Official Map" conspicuously displayed or readily available for viewing at the Resident Office. No changes will be made to the Official Map except through the formal updating process. The entire shoreline will be allocated within one of the following classifications.

(1) Limited Development Areas. These areas are shown in red on the shoreline allocation maps. Private facilities and/or activities including vegetation modification and foot-path construction are allowed.

(2) Public Recreation Areas. Public recreation areas and adjoining buffer areas are shown in green on the shoreline allocation maps. Private shoreline use facilities and/or activities are not permitted within designated or developed recreation areas or adjoining buffer areas.

(3) Protected Shoreline Areas. The shoreline allocation maps do not designate these areas with a color code. Shoreline Use Permits will not be issued for floating facilities in these zones. Vegetation modification and foot-path construction may be permitted in these areas. The Resident Engineer/Manager must determine that the requested land use will not adversely impact the environment or physical characteristics of the zoned area prior to issuing the shoreline use permit.

(4) Prohibited Access Areas. Prohibited access areas are shown in blue on the shoreline allocation maps. No shoreline use permits will be issued in Prohibited Access Areas. These areas typically include hazardous zones near dams, spillways, hydroelectric power stations, or water intake structures. Public access is not allowed in these areas for health, safety, or security reasons.

e. Public Participation in Plan Formulation . Public participation will be an integral part of the development and updating process for Shoreline Management Plans. Public input will be solicited through various means and techniques including public meetings, group workshops, and open houses. These sessions will be conducted at the Resident Offices or at convenient locations in the vicinity of the project. Resident Engineers/Managers will maximize the use of the news media to alert citizen and conservation organizations, Federal, state and local natural resource management agencies, commercial concessionaires, congressional liaisons, shoreline use permittees, and other concerned entities of the opportunity to participate in this process. Notices of public involvement opportunities will also allow for a 30-day period for receiving written public comments regarding the Plan or its revisions.

f. Plan Review and Updating Procedure. Shoreline Management Plans will be reviewed at least once every 5 years. The Plan may be supplemented more frequently should regulations, project conditions, or management objectives change significantly. The District Engineer may approve minor administrative revisions to the Plan when the revisions are consistent with ER 1130-2-406 or 36 CFR 327.30. Addition and/or deletion of Limited Development Areas are not minor revisions. Revisions of this nature require public involvement and approval by the Division Commander.

6. Instruments for Shoreline Use.

a. Shoreline Use Permits. Resident Engineers/Managers will use ENG Form 4264-R to evaluate and approve requests for private floating facilities and activities on the shoreline of projects with approved Shoreline Management Plans. Permits will be issued on ENG Form 4264-R. These permits will also be used to approve mowing for fire protection, foot-path construction, and similar activities which do not involve a change of land form or involve placement of permanent structures on project land. Multiple permitted uses should be included in the same permit. Administrative procedures regarding permit fees, terms, and transfer are furnished below:

(1) Permits should be issued for a period of 5 years to minimize administrative costs. Permit and annual inspection fees will be paid when the permit is issued. Fees for Shoreline Use Permits will be established by a separate regulation and are nonrefundable.

(2) Shoreline use permits are non transferable. The permits become null and void upon sale or transfer of the permitted facility or by the death of the permittee(s). Permits for facilities and/or activities in limited development areas and for grandfathered activities or facilities may be issued to the new owner(s) at the same location.

b. Department of the Army Permits. Requests involving dredging, placement of fill, construction of fixed or combination fixed-floating structures and discharge of dredged material will be evaluated under authority of Section 10 and/or Section 404 permit requirements by the Regulatory Branch, Construction-Operations Division. Applications to place only private floating facilities (boat docks) on the navigation pools of the Arkansas River (with the exception of Dardanelle and Ozark Lakes) will be evaluated under authority of Section 10 permit requirements. Shoreline Use Permits are not required for facilities covered by a Section 10 or 404 permit.

c. Real Estate Instruments. Requests involving commercial development, rights-of-way, or changes in the land form (grading, cuts, or fills) or establishment of land-based support facilities for private floating facilities will continue to be evaluated by Real Estate Division. Approval will be granted by granting a lease, license, or other legal grant issued by the Real Estate Division. Shoreline use permits are not required for facilities or activities covered by a real estate instrument.

7. Facilities Existing Under Special Conditions. The Plan will consider existing permitted facilities and prior written commitments. Approved facilities and/or activities outside of limited development areas will be grandfathered. Green permit tags will be used to designate facilities and activities being allowed under special conditions and to set them apart from other facilities and/or activities. Special provisions also apply to the removal of grandfathered facilities or activities lawfully installed and under permit as of 29 December 1981 or 17 November 1986. Procedures regarding removal of these grandfathered facilities as provided for in PL 97-140 and PL 99-662 are outlined in paragraph 8 of ER 1130-2-406.

8. Facility Maintenance. Minimum construction and maintenance requirements for private floating facilities are outlined in Appendix G. When deficiencies are detected, the Resident Engineer/Manager and permittee will establish a schedule, considering the seriousness of the safety deficiency, for correcting the situation at the permittee's expense.

DAVID R. RUF
Colonel, Corps of Engineers
District Engineer

7 APPENDIXES
APP A - Shoreline Use Permit-Guidelines
APP B - Shoreline Use Permit- Sample Application
APP C - Shoreline Use Permit-Conditions
APP D - Shoreline Use Permit-Sample Tag
APP E - Community Dock Organization Sample Forms
APP F- Electrical Certification Sample Form
APP G - Construction and Maintenance Requirements for Private Floating Facilities

DISTRIBUTION A

APPENDIX A

SHORELINE USE PERMIT GUIDELINES

1. General.

a. Decisions regarding permits for private shoreline uses will consider the objectives of the Shoreline Management Plan for the project and the physical characteristics of the project. The requested use must not result in any significant environmental damage to the shoreline. The requested facilities or related shoreline uses must not create a safety hazard or inhibit public use and enjoyment of project water or shoreline. The effects of added private mooring facilities on the commercial marina concessions providing similar services will also be considered.

b. Shoreline use permits will be issued only to applicants with a legal right of access to the shoreline involved. Access could involve adjacent ownership by the applicant, a documented legal right granted to the permittee to cross private property, or use of a dedicated public road in the vicinity of the area involved. The shoreline use permit does not convey any real estate or personal property rights or exclusive use rights to the permit holder merely because he/she is an adjacent property owner. The public's right of access and use of the permit area must be maintained and preserved.

c. The permitted use must not preclude the public right of pedestrian or vessel access to the water surface or public land involved. Permittees may take reasonable precautions to protect their property from theft, vandalism, or trespass.

d. Shoreline use permits are not required for temporary duck blinds constructed of natural materials.

2. Processing Shoreline Use Permits.

a. Applications for shoreline use permits may be obtained from the Resident Engineer/Manager at the project. Completed applications will be returned to the Resident Engineer/Manager who will have the responsibility to review, approve and issue the permit.

b. Two copies of the plans and specifications for the proposed facility and a site plan identifying any land based support facilities will be submitted to the Resident Engineer/Manager for review. Facilities must meet the Minimum Construction and Maintenance Requirements for Private Floating Facilities outlined in Appendix G. The plans must be approved by the Resident Engineer/Manager or accompanied by a written

certification from a licensed engineer stating that the facility is structurally safe. The shoreline use permit must be issued prior to beginning construction.

c. The following guidelines will also be considered when reviewing and approving shoreline use permits:

(1) The request will comply with all applicable conditions of the shoreline use permit as outlined in Appendix C. Additional permit conditions may be added upon approval by the Chief, Construction-Operations Division.

(2) Floating facilities will not exceed the minimum size to moor the owner's boat(s) plus the minimum size enclosed storage locker for items essential to watercraft operation. Floating facilities will not be used for human habitation. New docks must be constructed with open sides.

(3) Decks may be used for sun bathing. Diving boards or water slides will not be approved for use on private floating facilities. Adequate water depth for dock moorage does not assure adequate water depth for safe diving. Ladders may be provided on docks to facilitate loading and unloading boats.

(4) Current boat registrations will be required with the permit application to support boat ownership and the need for mooring space. This requirement is necessary to preclude commercial activity on the floating facility.

(5) Procedures regarding permits for individual facilities will also apply to permits for community facilities.

(6) All electrical installations must conform to current national and local electrical code requirements. The Resident Engineer/Manager will require immediate removal or disconnection of any electrical service or equipment that does not meet code or is not safely maintained.

(7) Shoreline use permits for mowing will be issued for a term of 5 years. Mowing may be included on the same permit with other shoreline uses.

d. The original copy of the approved lakeshore use permit, ENG Form 4264-R (Appendix B), will be returned to the permittee. Computer generated forms may be used in conjunction with automated Shoreline Management Programs. Computer generated forms will be designated ENG Form 4264-R-E. Copies of approved permits will be retained by the Resident Engineer/Manager.

3. Posting of Permit Numbers. Two white plastic permit tags, approximately 6 by 8 inches in size, bearing the permit number and expiration date will be furnished with each permit issued. These tags will be posted on the floating facility and/or the land area covered by the permit in accordance with instructions provided by the Resident Engineer/Manager. Facilities and/or activities permitted under special conditions, such as grandfathering, will be identified by using green permit tags to make them readily identifiable.

4. Permit Revocation. Authority to revoke Shoreline Use Permits rests with the District Commander. Permits may be revoked when the action is in the public interest or when the permittee fails to comply with the terms and conditions of the permit, the Shoreline Management Plan, or ER 1130-2-406. Conditions must be carefully and completely documented with copies of certified correspondence to the permittee, dated photographs and detailed inspection reports when recommending permit revocation to the District Commander. The permittee notification process is also outlined in permit Condition 26.

5. Removal of Facilities. It is the responsibility of the permittee to remove facilities upon termination of the shoreline use permit. If the permittee fails to do so, the District Commander may, under authority of permit Condition 11, remove the facility by contract or otherwise and require reimbursement of the costs incurred from the permittee. The provisions of Section 6 of Public Law 97-140 and Section 1134(d) of Public Law 99-662 must be given careful consideration before requiring removal of facilities under permit as of 17 Nov 86 or 29 Dec 81. Facilities not removed when specified in the permit or when requested after termination or revocation of the permit will be treated as unauthorized structures pursuant to 36 CFR 327.20.

THIS PAGE WAS
INTENTIONALLY LEFT BLANK

APPENDIX B
APPLICATION FOR SHORELINE USE PERMIT

APPLICATION FOR SHORELINE USE PERMIT
(ER 1130-2-406)
(See reverse side for Privacy Act Statement)
Print or type information requested below. Submit two completed and original signed copies of this application with two complete sets of plans and specifications to the Resource Manager.

PROJECT	DATE OF APPLICATION
NAME OF APPLICANT (and Spouse if applicable)	TELEPHONE, AREA CODE AND NUMBER
STREET	CITY, STATE, ZIP CODE

TYPE OF FACILITY (Check one or more blocks as appropriate) ☐ NEW ☐ RENEWAL

WATER-BASE		LAND-BASE	
☐ SINGLE-OWNER DOCK	☐ SKI JUMP	☐ UNDERBRUSHING	☐ MOWING
☐ COMMUNITY DOCK	☐ SKI COURSE	☐ PLANT / LANDSCAPING	☐ FOOT PATH
☐ MOORING BUOY	☐ SWIM FLOAT	☐ EROSION CONTROL	
☐ MOORING POST	☐ DUCK BLIND		

☐ OTHER (Describe) _____

BRIEF DESCRIPTION OF FACILITY LOCATION, STATE LICENSE NUMBER(S) OF BOAT(S) TO BE DOCKED (If this application is for a boat mooring facility) OR DEVELOPMENT (If this application is for land use):

FOR ILLUSTRATION PURPOSES ONLY
(Local reproduction authorized - blank masters available from local FMO)

THE FOLLOWING ALTERNATE PARTY WILL BE READILY AVAILABLE ON SHORT-NOTICE CALL AND RESPONSIBLE FOR PROVIDING ANY NEEDED SURVEILLANCE OF THE STRUCTURE IN MY ABSENCE.

NAME	TELEPHONE, AREA CODE AND NUMBER
STREET	CITY, STATE, ZIP CODE

I UNDERSTAND AND AGREE TO THE CONDITIONS OF THE PERMIT FOR SHORELINE USE. TWO COMPLETE SETS OF THE PLANS AND SPECIFICATIONS, INCLUDING SITE LOCATION AND LAYOUT PLAN, FOR THE PROPOSED ACTIVITY, STRUCTURE OR ANCHORAGE SYSTEM ARE ENCLOSED.

_____ (Date) _____ (Signature of Applicant)

_____ (Date) _____ (Signature of Alternate)

(DO NOT WRITE BELOW THIS LINE)

PERMIT

SHORELINE PERMIT NO.	DATE ISSUED	DATE EXPIRES (Date)

THE APPLICANT IS HEREBY GRANTED A PERMIT TO CONSTRUCT AND/OR MAINTAIN AND USE A FLOATING RECREATION FACILITY OR OTHER DEVELOPMENT AS SHOWN ON THE ATTACHED PLANS SUBJECT TO THE RULES AND REGULATIONS OF THE CORPS OF ENGINEERS ON WATERS UNDER THE CONTROL OF THE U.S. ARMY, CORPS OF ENGINEERS. THE PERMITTEE SHALL ADHERE TO THE CONDITIONS FOR SHORELINE USE SET FORTH IN APPENDIX C OF ER 1130-2-406.

_____ (Date) _____ (Signature of Resource Manager)

ENG FORM 4264-R, Oct 90 EDITION OF 1 DEC 74 IS OBSOLETE (Proponent: CECW-OR)

DATA REQUIRED BY THE PRIVACY ACT OF 1974

AUTHORITY	The Rivers and Harbors Act of 1894 as amended and supplemented (33 U.S.C. 1)
PRINCIPAL PURPOSE	Provide the Corps of Engineers with information for contact of the responsible person applying for and/or receiving a Shoreline Management permit. The description of the activity is needed to assure conditions of the permit requirements are met.
ROUTINE USES	The information on this application is used in considering the issuance of shoreline management permits on Corps of Engineers projects. This information is collected and maintained at project offices and is used a basis for issuing permits. It provides auditing information for this program which has financial involvement.
DISCLOSURE	Disclosure of information is voluntary. However, failure to provide the requested information will preclude the issuance of a Shoreline Management permit.

Reverse of ENG Form 4264-R, Oct 90

APPENDIX C
SHORELINE USE PERMIT CONDITIONS

Note: The number shown in parenthesis () refers to the corresponding condition of ER 1130-2-406, Appendix C.

1. This permit is granted solely to the applicant for the purpose(s) described on the attached permit. (1)

2. This permit is non-transferable. Upon the sale or other transfer of the permitted facility or the death of the permittee and his/her legal spouse, this permit is null and void. (20)

3. If the ownership of a permitted facility is sold or transferred, the permittee or new owner will notify the Resource Manager of the action prior to finalization. The new owner must apply for a Shoreline Use Permit within 14 days or remove the facility and restore the use area within 30 days from the date of ownership transfer. (26)

4. The permittee agrees to and does hereby release and agree to save and hold the Government harmless from any and all causes of action, suits at law or equity, or claims or demands or from any liability of any nature whatsoever for or on account of any damages to persons or property, including a permitted facility, growing out of the ownership, construction, operation or maintenance by the permittee of the permitted facilities and/or activities. (2)

5. The Government shall in no case be liable for any damage or injury to a permitted facility which may be caused by or result from subsequent operations undertaken by the Government for the improvement of navigation or for other lawful purposes, and no claims or right to compensation shall accrue from any such damage. This includes any damage that may occur to private property if a facility is removed for noncompliance with the conditions of the permit. (6)

6. Ownership, construction, operation, use and maintenance of a permitted facility are subject to the Government's navigation servitude. (3)

7. No attempt shall be made by the permittee to forbid the full and free use by the public of all public waters and/or lands at or adjacent to the permitted facility or to unreasonably interfere with any authorized project purposes, including navigation in connection with the ownership, construction, operation or maintenance of a permitted facility and/or activity. (4)

8. The permittee agrees that if subsequent operations by the Government require an alteration in the location of a permitted facility and/or activity or if in the opinion of the district commander a permitted facility and/or activity shall cause unreasonable obstruction to navigation or that the public interest so requires, the permittee shall be required, upon written notice from the district commander, to remove, alter, or relocate the permitted facility without expense to the Government. (5)

9. Ownership, construction, operation, use and maintenance of a permitted facility and/or activity are subject to all applicable Federal, state and local laws and regulations. Failure to abide by these applicable laws and regulations may be cause for revocation of the permit. (7)

10. This permit does not convey any property rights either in real estate or material, and does not authorize any injury to private property or invasion of private rights or any infringement of Federal, state or local laws or regulations, nor does it obviate the necessity of obtaining state or local assent required by law for the construction, operation, use or maintenance of a permitted facility and/or activity. (8)

11. The permittee shall remove a permitted facility within 30 days, at his/her expense, and restore the waterway and lands to a condition accepted by the resource manager upon termination or revocation of this permit or if the permittee ceases to use, operate or maintain a permitted facility and/or activity. If the permittee fails to comply to the satisfaction of the resource manager, the district commander may remove the facility by contract or otherwise and the permittee agrees to pay all costs incurred thereof. (10)

12. Facilities granted under this permit will not be leased, rented, sublet or provided to others by any means of engaging in commercial activity(s) by the permittee or his/her agent for monetary gain. This does not preclude the permittee from selling total ownership to the facility. (13)

13. Permitted facilities and activities are subject to periodic inspection by authorized Corps representatives. The resource manager will notify the permittee of any deficiencies and together establish a schedule for their correction. No deviation or changes from approved plans will be allowed without prior written approval of the resource manager. (15)

14. The resource manager or his/her authorized representative shall be allowed to cross the permittee's property, as necessary, to inspect facilities and/or activities under permit. (24)

15. The permit display tag shall be posted on the permitted facility and/or on the land areas covered by the permit so that it can be visually checked with ease in accordance with instructions provided by the resource manager. (17)

16. The permittee agrees to construct the facility within the time limit agreed to on the permit issuance date. The permit shall become null and void if construction is not completed within that period. Further, the permittee agrees to operate and maintain any permitted facility and/or activity in a manner so as to provide safety, minimize any adverse impact on fish and wildlife habitat, natural, environmental, or cultural resources values and in a manner so as to minimize the degradation of water quality. (9)

17. The use of a permitted boat dock facility shall be limited to the mooring of the permittee's vessel or watercraft and the storage, in enclosed locker facilities, of his/her gear essential to the operation of such vessel or watercraft. (11)

18. Neither a permitted facility nor any houseboat, cabin cruiser, or other vessel moored thereto shall be used as a place of habitation or as a full or part-time residence or in any manner which gives the appearance of converting the public property, on which the facility is located, to private use. (12)

19. On all new docks and mooring buoys, flotation shall be of materials which will not become waterlogged (not over 1-1/2 percent by volume ASTM), is resistant to damage by animals, and will not sink or contaminate the water if punctured. No metal covered or injected drum flotation will be allowed. Foam bead flotation that is not subject to deterioration through loss of beads, meets the above criteria, and has a minimum density of 1.2 lb/cu ft is authorized. Foam bead flotation with a density of 1.0 lb/cu ft, but does not otherwise meet the above criteria is authorized provided it is encased in an approved protective coating which enables it to meet the specification above. An approved coating is defined as warranted by the manufacturer for a period of at least eight years against cracking, peeling, sloughing and deterioration from ultra violet rays, while retaining its resiliency against ice and bumps by watercraft. Existing flotation will be authorized until it has severely deteriorated and is no longer serviceable or capable of supporting the structure, at which time it should be replaced with approved flotation. (14)

20. Floating facilities shall be securely attached to the shore in accordance with the approved plans by means of moorings which do not obstruct general public use of the shoreline or adversely affect the natural terrain or vegetation. Anchoring to vegetation is prohibited. (16)

21. If permitted facilities are removed for storage or extensive maintenance, the resource manager may require all portions of the facility be removed from public property. (27)

22. No change in land form such as grading, excavation or filling is authorized by this permit. (19)

23. No vegetation other than that prescribed in the permit will be damaged, destroyed or removed. No vegetation of any kind will be planted, other than that specifically prescribed in the permit. (18)

24. When vegetation modification is allowed, the permittee will delineate the government property line in a clear, but unobtrusive manner approved by the resource manager and in accordance with the project shoreline management plan. (25)

25. When vegetation modification on these lands is accomplished by chemical means, the program will be in accordance with appropriate Federal, state and local laws, rules and regulations. (23)

26. By 30 days written notice, mailed to the permittee by certified letter, the district commander may revoke this permit whenever the public interest necessitates such revocation or when the permittee fails to comply with any permit condition or term. The revocation notice shall specify the reasons for such action. If the permittee requests a hearing in writing to the district commander through the resource manager within the 30-day period, the district commander shall grant such hearing at the earliest opportunity. In no event shall the hearing date be more than 60 days from the date of the hearing request. Following the hearing, a written decision will be rendered and a copy mailed to the permittee by certified letter. (21)

27. Notwithstanding the condition cited in condition 26, if in the opinion of the district commander, emergency circumstances dictate otherwise, the district commander may summarily revoke the permit. (22)

APPENDIX D

SHORELINE USE PERMIT TAG
(SAMPLE)

Permit 01234
Expires 30 Nov. 1987

This Permit is Non-Transferrable
and May be Revoked at Any Time

US Army Corps
of Engineers

FOR ILLUSTRATION PURPOSES ONLY

NOTE: Facilities and/or activities permitted under special conditions, such as grandfathered docks, will be identified with a permit tag with a green background. All other permit tags will have a white background.

THIS PAGE WAS
INTENTIONALLY LEFT BLANK

APPENDIX E

Community Dock Forms (Sample)

COMMUNITY DOCK OWNERS ASSOCIATION AGREEMENT

I, the undersigned, certify that I am an owner of a boat stall or stalls, in the_____Community Dock and agree to the following statements and conditions:

1. I agree that by unanimous vote_____ has been elected a representative of the owners and as such is listed as the permittee. The permittee is responsible for maintaining the dock in accordance with the rules and regulations of the Corps of Engineers and will continue as such until replaced by a majority vote of the owners.

2. I agree that the amount and type of insurance to be carried on said dock shall be determined by majority vote of the dock owners, and the cost thereof stated.

3. I agree that all approved new additions shall conform in design and construction to the existing dock and shall be painted the same color.

4. I agree that in the event approval is granted to attach one or more stalls to the dock, for each stall attached the new owner shall compensate the Owners Association in the amount of $_____ for their proportionate share of such items as stiffarms, cable and anchors, walkways, and electrical service.

5. I agree that I own no other boat slips in any other dock.

6. I agree that a family will be limited to two (2) single slips and mooring of (2) boats in a community dock.

7. I agree that all boats will be moored inside a slip.

8. I agree to provide written notification to the Resident Engineer/Manager at _____ Lake and the respective County of any change in ownership of dock slips.

9. I agree not to rent or lease any boat slips.

10. I agree that prior to a change of the permittee a request must be submitted with signatures of the majority of stall owners and a completed application for a Shoreline Use Permit.

11. I agree to be responsible for a percentage of the expenses of the maintenance and general upkeep of this dock.

In signing this agreement, I also agree to abide by all rules and regulations pertaining to private floating facilities as provided by the U.S. Army Corps of Engineers. I have completed all the necessary forms and read the "Shoreline Use Permit Conditions." I attest that all owner information provided to the Corps of Engineers is factual and bonafide and that any misrepresentation to obtain a permit will result in termination or disqualification of the permit application.

Signed and dated this _____ day of _____ , 19 ____

_____

_____

State of _____)
County of _____)
On this _____ day of _____ , 19___
_____ to be known to be the person or persons described in and who executed the foregoing instrument, and acknowledged that _____ executed the same as their free act and deed.
In TESTIMONY WHEREOF, I have herato set my hand and affixed my official seal in the County and State aforementioned, the day and year first above written.
My term expires _____ , 19 ____ .

_____
Notary Public

Reverse of Association Agreement

CONTRACT FOR SALE OF STALL(S)
IN COMMUNITY BOAT DOCKS

This contract, made and entered into this _____ day of _____, 19 _____, by and between_____ _____ the seller, and_____ _____ , the Buyer. The terms Seller and Buyer may be either singular or plural according to whichever is evidenced by the signatures below.
WITNESSED: For and in consideration of the mutual obligations of the parties hereto, the Seller hereby agrees to sell and convey unto the Buyer and the Buyer agrees to purchase from Seller, upon the terms and conditions hereinafter set forth, the following * described property to be situated in the County of_____ State of _____ , to Wit:

*Description must include:
1)exact number of slips purchased
2)assigned stall(s) numbers as indicated on attached dock layout drawing
3)stall dimensions (length and width)
4)appropriate share and description of common facilities such as electricity, anchorage, sun deck, etc.

The price for said property shall be $_____

This contract is given subject to the Buyers ability to obtain a U.S. Army Corps of Engineers approval on the construction and location of the above community dock.

BUYER_____ DATE_____ TIME_____

BUYER_____ DATE_____ TIME_____

SELLER_____ DATE_____ TIME_____

SELLER_____ DATE_____ TIME_____

NOTE: In order to meet U.S. Army Corps of Engineers approval this document must be fully executed between the stall buyer and the prime contractor who will construct and deliver the facility.

STATE OF_____

COUNTY OF_____ on this_____ day of _____,19__

before me,_____, a Notary Public, personally

appeared_____ and_____

his wife, to me known to be the persons described in and who executed the foregoing instrument, and acknowledged that they executed the same as their free act and deed.

IN TESTIMONY WHEREOF, I have hereunto set my hand and affixed my official seal at my office in _____ the day and year last above written.

My term expires_____, 19____

_____ Notary Public in and for said County and State.

STATE OF_____ IN THE RECORDERS OFFICE

COUNTY OF_____

I,_____ Recorder of said County, do hereby certify that the within instrument of writing was at_____ o' clock and _____ minutes_____M., on the____ day of _____A.D., 19____, duly filed for record in my office, and is recorded in the records of this office, in book_____, at page_____.

IN WITNESS WHEREOF, I have hereunto set my hand and affixed my official seal seal at_____ this_____ day of_____A.D., 19_____

_____ Recorder

Reverse of Contract for Sale of Stall(s)

APPENDIX F

Electrical Certification Form
(Sample)

CERTIFICATE OF ELECTRICAL INSPECTION

This is to certify that the electrical facilities on and in conjunction with dock number _____ on _____ Lake were inspected on this ____ day of _____, 19__, and to the best of my knowledge, they appear to be in compliance with the requirements of the National Electrical Code. This inspection is solely for the use of the Little Rock District, Corps of Engineers, P.O. Box 867, Little Rock, Arkansas, 72203-0867.

This inspection is not applicable to any electrical changes (additions or deletions) to the above facilities after the date of this inspection.

COMMENTS: _____

_____

_____

_____
Name of Electrician or Electrical Contractor (Print)

_____
Inspector's Name (Print)

_____
Telephone Number (Print)

_____
Inspector's License Number

_____
Inspector's Signature

THIS PAGE WAS
INTENTIONALLY LEFT BLANK

APPENDIX G

MINIMUM CONSTRUCTION AND MAINTENANCE REQUIREMENTS FOR PRIVATE FLOATING FACILITIES

1. General. This appendix is designed to assist the applicant and dock permittee in constructing a safe, well maintained private dock on projects within the Little Rock District.

2. General Requirements:

a. The mooring location for the dock must be approved by the Resident Engineer/Manager prior to construction of the dock. Each applicant must furnish two sets of plans for the dock, drawn to an appropriate scale, for review and approval by the Resident Engineer/Manager prior to starting construction of the dock.

b. The facility will be subject to periodic inspection by Corps personnel during construction and/or assembly. No deviation or changes from approved plans will be permitted without prior written approval of Corps personnel. Upon completion, all docks placed or operated on the project are subject to periodic inspection by the Resident Engineer/Manager or his authorized representative. If the inspection reveals conditions which make the dock unsafe from a safety, navigation, or other standpoint, such conditions must be corrected within the time period specified by the Resident Engineer/Manager.

c. Additional requirements may be specified on the (Eng Form 4264-R) and/or in the shoreline management plan for the project.

3. Design Criteria.

a. Design Loads (Minimum) :

(1)	Deck loads and walkways (substructure)	30#/sq ft
(2)	Windloads (sub- and superstructures)	20#/sq ft
(3)	Roof loads (superstructures)	10#/sq ft

b. Wood Construction: Wood materials will be of good quality, suitable for the intended purpose. All connections will be secured to resist movement that would tend to dismantle the structural connections. Treated lumber will be used in the substructure, decking and walkways. "Penta" or "creosote"

treated lumber may not be used in Missouri waters due to the toxicity of the material and regulations by the State. Wood material in the superstructure does not have to be treated, but the exposed exterior will be painted with two coats of exterior grade paint.

(1) Wooden floor joists and flotation frames shall be not less than 2" x 8" spaced 24" center to center, maximum.

(2) Wood columns may be 4" x 4" and/or double 2" x 4" spaced not more than 4' -0" center to center or single 2" x 4", spaced not more than 2' -0" center to center. Where the roof structure has adequate bracing, the 4" x 4" vertical supports may be spaced up to 8' -0" on centers. Columns will be spaced symmetrically on each side of walkways. Wood columns will be bolted through the 4" dimension to 2" x 8" stringers or flotation frames.

(3) Wooden walkways and decking shall be not less than 1" rough, 2" x 6" S4S, 3/4" exterior plywood, or other material capable of supporting the minimum design load of 30#/sq. ft.

(4) Wood roof joists or rafters shall be 2" x 6" spaced not more than 2' -0" center to center. Consideration will be given to a 4' -0" spacing where there are sufficient vertical supports and bracing. Purlin shall be 2" x 4" spaced not more than 30" center to center.

(5) Wood roof decking may consist of 1" nominal tongue and groove, shiplap or 1/2" plywood sheathing covered with 90-pound asphalt roll roofing or asphalt shingles. When asphalt shingles are used the roof slope must be at least 4 on 12.

c. Metal Construction: New metal on the exposed exterior of the superstructure is desired. Used metal may be authorized if it is in good condition. Either welded or bolted connections may be used.

(1) Metal floor joists and flotation frames shall be not less than 2" ID standard pipe. Framing for pipe construction shall be not less than 1-1/4" ID standard pipe. Studs shall not exceed 48" center to center. Other standard steel or aluminum structural sections may be approved if designed for the minimum design load.

(2) Metal roof joists or rafters shall be 1-1/4" ID standard pipe or larger spaced not more than 2' -0" center to center. Consideration will be given to approving 4' -0" spacing where sufficient vertical supports and bracing are provided. Purlins shall be 1" ID standard pipe or larger spaced not more

than 2' -0" center to center. Other standard steel or aluminum structural sections may be approved if designed for the minimum design loads.

(3) Metal roofs must be a minimum of 28 gauge for steel. Aluminum roofs must have a minimum thickness of 0.032 inches.

d. Bracing. All columns and studwalls will be adequately braced to resist windloadsss. Bracing will be designed and constructed to counteract design loads while allowing sufficient flexibility so wave action will not damage the structural and/or roof system.

e. Flotation. Flotation shall provide for a stabilized and safe structure capable of supporting the minimum design loads. Flotation materials must be securely attached to the dock using galvanized steel straps, treated wood dowels, galvanized bolts or other approved methods. Adequate flotation will be provided to keep all wood and metal portions of the deck and substructure above the water at all times. Flotation that is no longer capable of supporting the design loads shall be replaced with approved flotation. Metal covered or injected drum flotation will not be allowed.

(1) On all new docks and mooring buoys, flotation shall be of materials which will not become waterlogged (not over 1-1/2 percent by volume ASTM), is resistant to damage by animals, and will not sink or contaminate the water if punctured. Foam bead flotation that is not subject to deterioration through loss of beads, meets the above criteria, and has a minimum density of 1.2 lb/cu ft is authorized.

(2) Foam bead flotation with a density of 1.0 lb/cu ft, but does not otherwise meet the above criteria is authorized provided it is encased in an approved protective coating which enables it to meet the specification above. An approved coating is defined as warranted by the manufacturer for a period of at least eight years against cracking, peeling, sloughing and deterioration from ultra violet rays, while retaining its resiliency against ice and bumps by watercraft.

(3) Existing flotation will be authorized until it has severely deteriorated and is no longer serviceable or capable of supporting the structure, at which time it should be replaced with approved flotation.

f. Roofs. Roofs may be gabled or single-pitched. The roofs must be securely fastened to the superstructure to resist wind uplift.

g. Anchorage. An anchorage system shall provide secure mooring of the structure. Anchorage system utilizing a dead man or ground stakes shall be installed flush with the existing grade. Anchor cables or other securing devices shall be maintained in good repair, and located to minimize obstruction hazards to pedestrians, boaters, and vehicular traffic. Anchor cables will not be attached to trees, stumps, power poles, guardrail posts, etc.

h. Walkways:

(1) Main walkways shall be at least 3 feet in width. The minimum width walkway between slips shall be 3 feet when used as access to boats.

(2) Walkways from shore to dock shall be free from excessive spring, deflection, and lateral movement, and adequately supported with flotation to provide safe access.

(3) Walkways shall be above the water at all times and kept free from materials or obstructions which would render them unsafe to the persons using them. A handrail will be provided on at least on side of the walkway.

(4) The method of permanently attaching the walkway to the dock and anchoring it to the shore will be shown in detail on the dock plans.

i. Handrails:

(1) Handrails will be provided on at least one side of the walkways leading to the dock and perimeter areas of the dock not subjected to frequent loading and unloading of boats.

(2) Handrails shall be approximately 42 inches in height, with a guardrail approximately 22 inches in height below the handrail.

(3) Handrails must be structurally sound, maintained in a state of good repair, and a minimum size of 2" x 4 equivalent strength material. Posts for handrails shall be spaced no more than 8" -0" on centers; minimum post size of 4" x 4" or 2" O.D. standard pipe or equivalent.

j. Stabilized or Underwater Brace. A Stabilized or underwater brace is recommended on the lake side of the dock between walkways.

k. Fire Protection. A fully charged A-B-C dry chemical fire extinguisher or one with a U/L classification of 20B is recommended.

l. Electrical: All electrical work shall meet the requirements of this directive as well as all local and state codes and the National Electrical Code. Particular attention should be given to Article 555 of the National Electrical Code. It is strongly recommended that all electrical work be done by a licensed electrician, engineer or electrical contractor. Where a meter pole is used, its location shall be such that the meter and pole-mounted service equipment are installed a minimum of 3 feet above the reference pool elevation shown in Table 1 of this appendix. In areas where no flood control is provided, the meter and pole-mounted service equipment shall be mounted above the maximum water elevation at which the dock can be safely maintained. A fused disconnect switch shall be provided for de-energizing the feeder cable at its source.

(1) Temporary power service requirements. During the construction or assembly of the dock, 3-wire grounding extension cords may be used to provide temporary electrical service to the dock mooring site. Extension cords will be kept out of reach of pedestrian traffic and they will be removed when not in use or fully supervised by the dock owner/builder. Extension cords may not be used as a source of electricity to complete private floating facilities.

(2) Permanent power service requirements. In the interest of reducing potential safety hazards inherent in supplying power to floating structures, underground installation with a submerged feeder conductors to the dock is encouraged, where practicable. However, overhead feeders may be used if they are properly sized and constructed.

(a) Underground. The feeder conductors shall be designed and installed in accordance with the general requirements indicated in Table 1 of this appendix. The conductors shall be sized for acceptable voltage drop over their entire length at the rating of the dock feeder disconnect equipment. Minimum conductor size shall be No. 6 AWG unless the circuit designer submits appropriate voltage drop calculations which indicate that a smaller size would provide an acceptable voltage level at the dock. Underground feeder conductors shall be of a type suitable for direct burial such as type UF or USE. Other types of cable suitable for underwater use, but unsuitable for direct burial may be used if installed in conduit for the

underground portion of the run. In areas were excavation for an underground feeder would be through rock or where elevations and slopes of the affected terrain are such as to render excavation extremely difficult, conduit properly attached to the surface and covered with concrete in areas exposed to traffic will be considered. The feeder cables shall contain a separate identified insulated grounding conductor in addition to the grounded neutral conductor. This conductor shall be run from a grounding electrode on shore and terminate at an equipment grounding block in the panelboard, load center or outlet(s) on the dock to provide positive grounding for the wiring system. The submerged loop portion of the feeder cable shall be attached to the dock, on the water side of the structure, with a "Kellems Grip" or other similar approved device which grips the outside jacket of the cable over a length not less than 6 inches and prevents strain from the weight of the cable from being placed on the conductors.

(b) Overhead. The feeder conductors shall be designed and installed in accordance with the general requirements indicated in Table 1 of this appendix. The conductors shall be sized for acceptable voltage drop over their entire length at the rating of the dock feeder disconnect equipment. The feeder shall be No. 6 AWG minimum size unless the circuit designer submits voltage drop and capacity calculations which indicate that a smaller size would provide an acceptable voltage level at the dock. The feeder shall be a multi-conductor neoprene jacketed cable carried on a messenger wire or a messenger-type feeder cable. Minimum voltage rating of the feeder cable shall be 600 volts. The feeder cable shall contain a separate identified insulated grounding conductor in addition to the neutral conductor and messenger wire. This conductor shall be run from a grounding electrode on shore and terminate at an equipment grounding block in the panelboard, load center or outlet(s) on the dock to provide positive grounding for the wiring system. The suspension system must be designed to prevent the occurrence of undue sag and to accommodate slack cable when the dock is moved toward land, to prevent strain on the insulated conductors and to maintain the required clearance over land and water. Overhead feeder cables shall be installed to have minimum clearances of 18 feet in areas where public vehicular travel may occur. In other areas where a sailboat is physically prevented from entering the area, the overhead feeder lines may be installed with a minimum vertical clearance of 12 feet. Erection of barrier floats, warning buoys, signs, or other physical barriers to prevent sailboats from entering areas with overhead powerlines will be allowed with the written approval of the District Commander. The design clearance for feeder lines operating at voltages less than 750 volts and where sailboating

can reasonably be expected is 55 feet, and 12 feet over walkways on shore and in areas of the lake where sailboats are prevented from entering.

The clearances over the lake are dimensioned above the lake elevation at its flood control level. These levels for the Little Rock District lakes are shown in Table 1 of this appendix.

TABLE 1
FLOOD CONTROL POOL ELEVATIONS

WHITE RIVER SYSTEM

Beaver	1130
Table Rock	931
Bull Shoals	695
Norfork	580
Greers Ferry	487
Clearwater	567

ARKANSAS RIVER SYSTEM

Blue Mountain	419
Nimrod	373
James W. Trimble	392
Ozark	372
Dardanelle	338
Arthur V. Ormond	287
Toad Suck	265
Murray	249
David D. Terry	231
L&D 5	213
L&D 4	196
L&D 3	182
Lock 2 - Wilbur Mills Dam	162

LITTLE RIVER SYSTEM

DeQueen	473.5
Gillham	569
Dierks	557.5
Millwood	287

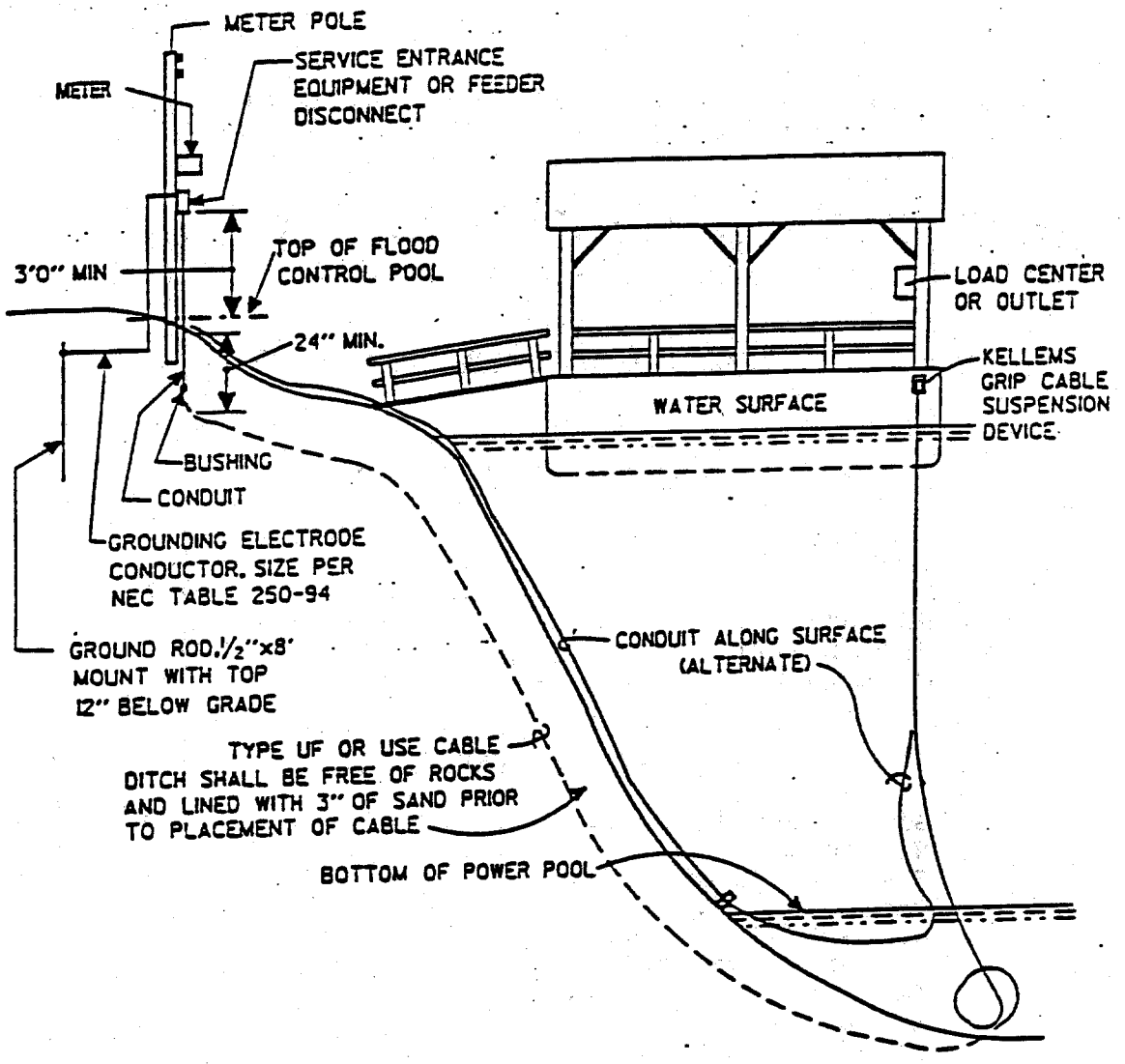

NOTES:

(1) Cable shall be buried 3' out into lake at all times and 24" below ground with 6" of sand backfill.

(2) Cable shall be long enough to run from meter pole to a point on the shore at the bottom of the power pool and back up the shore to the dock at the top of the flood control pool.

UNDERGROUND ELECTRIC SERVICE TO BOAT DOCKS

NO SCALE

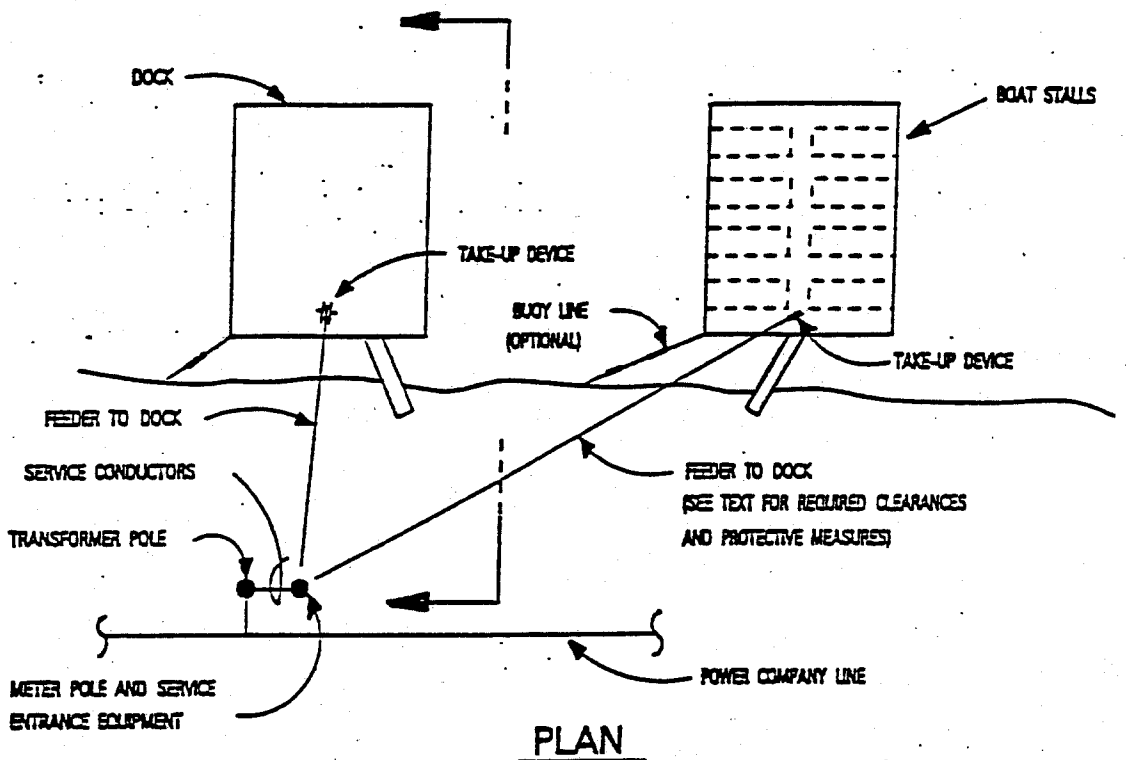

PLAN

NO SCALE

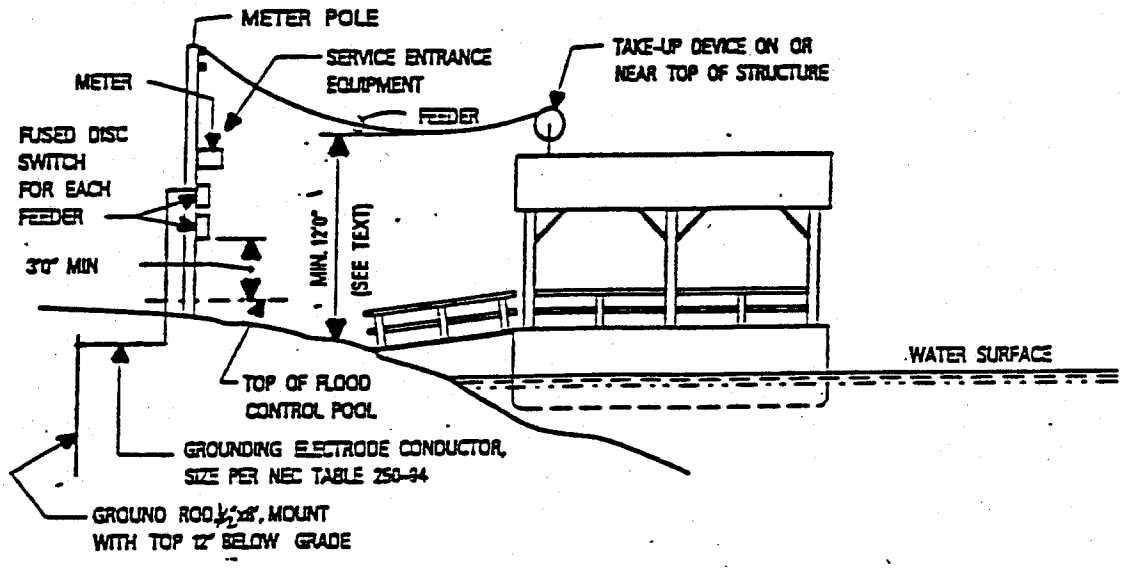

SECTION

NO SCALE

THIS PAGE WAS
INTENTIONALLY LEFT BLANK

PART 327—RULES AND REGULATIONS GOVERNING PUBLIC USE OF WATER RESOURCE DEVELOPMENT ADMINISTERED BY THE CHIEF OF ENGINEERS

§ 327.30 Shoreline Management on Civil Works Projects.

(a) *Purpose.* The purpose of this regulation is to provide policy and guidance on management of shorelines of Civil Works projects where 36 CFR part 327 is applicable.

(b) *Applicability.* This regulation is applicable to all field operating agencies with Civil Works responsibilities except when such application would result in an impingement upon existing Indian rights.

(c) *References.* (1) Section 4, 1944 Flood Control Act, as amended (16 U.S.C. 460d).

(2) The Rivers and Harbors Act of 1894, as amended and supplemented (33 U.S.C. 1)

(3) Section 10, River and Harbor Act of 1899 (33 U.S.C. 403).

(4) National Historic Preservation Act of 1966 (Pub. L. 89–665; 80 Stat. 915) as amended (16 U.S.C. 470 et seq.).

(5) The National Environmental Policy Act of 1969 (42 U.S.C. 4321, et seq.).

(6) The Clean Water Act (33 U.S.C. 1344, et seq.).

(7) The Water Resources Development Act of 1986 (Pub. L. 99–662).

(8) Title 36, chapter III, part 327, Code of Federal Regulations, "Rules and Regulations Governing Public Use of Water Resource Development Projects Administered by the Chief of Engineers."

(9) Executive Order 12088 (13 Oct. 78).

(10) 33 CFR 320–330, "Regulatory Programs of the Corps of Engineers."

(11) ER 1130–2–400, "Management of Natural Resources and Outdoor Recreation at Civil Works Water Resource Projects."

(12) EM 385–1–1, "Safety and Health Requirements Manual."

(d) *Policy.* (1) It is the policy of the Chief of Engineers to protect and manage shorelines of all Civil Works water resource development projects under Corps jurisdiction in a manner which will promote the safe and healthful use of these shorelines by the public while maintaining environmental safeguards to ensure a quality resource for use by the public. The objectives of all management actions will be to achieve a balance between permitted private uses and resource protection for general public use. Public pedestrian access to and exit from these shorelines shall be preserved. For projects or portions of projects where Federal real estate interest is limited to easement title only, management actions will be appropriate within the limits of the estate acquired.

(2) Private shoreline uses may be authorized in designated areas consistent with approved use allocations specified in Shoreline Management Plans. Except to honor written commitments made prior to publication of this regulation, private shoreline uses are not allowed on water resource projects where construction was initiated after December 13, 1974, or on water resource projects where no private shoreline uses existed as of that date. Any existing permitted facilities on these projects will be grandfathered until the facilities fail to meet the criteria set forth in § 327.30(h).

(3) A Shoreline Management Plan, as described in § 327.30(e), will be prepared for each Corps project where private shoreline use is allowed. This plan will honor past written commitments. The plan will be reviewed at least once every five years and revised as necessary. Shoreline uses that do not interfere with authorized project purposes, public safety concerns, violate local norms or result in significant environmental effects should be allowed unless the public participation process identifies problems in these areas. If sufficient demand exists, consideration should be given to revising the shoreline allocations (e.g. increases/decreases). Maximum public participation will be encouraged as set forth in § 327.30(e)(6). Except to honor written commitments made prior to the publication of this regulation, shoreline management plans are not required for those projects where construction was initiated after December 13, 1974, or on projects not having private shoreline use as of that date. In that case, a statement of policy will be developed by the district commander to present the shoreline management policy. This policy statement will be subject to the approval of the division commander. For projects where two or more agencies have jurisdiction, the plan will be cooperatively prepared with the Corps as coordinator.

(4) Where commercial or other public launching and/or moorage facilities are not available within a reasonable distance, group owned mooring facilities may be allowed in Limited Development Areas to limit the proliferation of individual facilities. Generally only one permit will be necessary for a group owned mooring facility with that entity, if incorporated, or with one person from the organization designated as the permittee and responsible for all moorage spaces within the facility. No charge may be made for use of any permitted facility by others nor shall any commercial activity be engaged in thereon.

(5) The issuance of a private shoreline use permit does not convey any real estate or personal property rights or exclusive use rights to the permit holder. The public's right of access and use of the permit area must be maintained and preserved. Owners of permitted facilities may take necessary precautions to protect their property from theft, vandalism or trespass, but may in no way preclude the public right of pedestrian or vessel access to the water surface or public land adjacent to the facility.

(6) Shoreline Use Permits will only be issued to individuals or groups with legal right of access to public lands.

(e) *Shoreline Management Plan—*

(1) *General.* The policies outlined in § 327.30(d) will be implemented through preparation of Shoreline Management Plans, where private shoreline use is allowed.

(2) *Preparation.* A Shoreline Management Plan is prepared as part of the Operational Management Plan. A moratorium on accepting applications for new permits may be placed in effect from the time an announcement of creation of a plan or formal revision of a plan is made until the action is completed.

(3) *Approval.* Approval of Shoreline Management Plans rests with division commanders. After approval, one copy of each project Shoreline Management Plan will be forwarded to HQUSACE (CECW–ON) WASH DC 20314–1000. Copies of the approved plan will also be made available to the public.

EXHIBIT III

(4) *Scope and Format.* The Shoreline Management Plan will consist of a map showing the shoreline allocated to the uses listed in § 327.30(e)(6), related rules and regulations, a discussion of what areas are open or closed to specific activities and facilities, how to apply for permits and other information pertinent to the Corps management of the shoreline. The plan will be prepared in sufficient detail to ensure that it is clear to the public what uses are and are not allowed on the shoreline of the project and why. A process will be developed and presented in the Shoreline Management Plan that prescribes a procedure for review of activities requested but not specifically addressed by the Shoreline Management Plan.

(5) *Shoreline Allocation.* The entire shoreline will be allocated within the classifications below and delineated on a map. Any action, within the context of this rule, which gives a special privilege to an individual or group of individuals on land or water at a Corps project, that precludes use of those lands and waters by the general public, is considered to be private shoreline use. Shoreline allocations cover that land and/or water extending from the edge of the water and waterward with the exception of allocations for the purpose of vegetation modification which extends landward to the project boundary. These allocations should complement, but certainly not contradict, the land classifications in the project master plan. A map of sufficient size and scale to clearly display the shoreline allocations will be conspicuously displayed or readily available for viewing in the project administration office and will serve as the authoritative reference. Reduced or smaller scale maps may be developed for public dissemination but the information contained on these must be identical to that contained on the display map in the project administration office. No changes will be made to these maps except through the formal update process. District commanders may add specific constraints and identify areas having unique characteristics during the plan preparation, review, or updating process in addition to the allocation classifications described below.

(i) *Limited Development Areas.* Limited Development Areas are those areas in which private facilities and/or activities may be allowed consistent with § 327.30(h) and appendix A. Modification of vegetation by individuals may be allowed only following the issuance of a permit in accordance with appendix A. Potential low and high water conditions and underwater topography should be carefully evaluated before shoreline is allocated as Limited Development Area.

(ii) *Public Recreation Areas.* Public Recreation Areas are those areas designated for commercial concessionaire facilities, Federal, state or other similar public use. No private shoreline use facilities and/or activities will be permitted within or near designated or developed public recreation areas. The term "near" depends on the terrain, road system, and other local conditions, so actual distances must be established on a case by case basis in each project Shoreline Management Plan. No modification of land forms or vegetation by private individuals or groups of individuals is permitted in public recreation areas.

(iii) *Protected Shoreline Areas.* Protected Shoreline Areas are those areas designated to maintain or restore aesthetic, fish and wildlife, cultural, or other environmental values. Shoreline may also be so designated to prevent development in areas that are subject to excessive siltation, erosion, rapid dewatering, or exposure to high wind, wave, or current action and/or in areas in which development would interfere with navigation. No Shoreline Use Permits for floating or fixed recreation facilities will be allowed in protected areas. Some modification of vegetation by private individuals, such as clearing a narrow meandering path to the water, or limited mowing, may be allowed only following the issuance of a permit if the resource manager determines that the activity will not adversely impact the environment or physical characteristics for which the area was designated as protected. In making this determination the effect on water quality will also be considered.

(iv) *Prohibited Access Areas.* Prohibited Access Areas are those in which public access is not allowed or is restricted for health, safety or security reasons. These could include hazardous areas near dams, spillways, hydro-electric power stations, work areas, water intake structures, etc. No shoreline use permits will be issued in Prohibited Access Areas.

(6) *Public Participation.* District commanders will ensure public participation to the maximum practicable extent in Shoreline Management Plan formulation, preparation and subsequent revisions. This may be accomplished by public meetings, group workshops, open houses or other public involvement techniques. When master plan updates and preparation of the Shoreline Management Plans are concurrent, public participation may be combined and should consider all aspects of both plans, including shoreline allocation classifications. Public participation will begin during the initial formulation stage and must be broad-based to cover all aspects of public interest. The key to successful implementation is an early and continual public relations program. Projects with significant numbers of permits should consider developing computerized programs to facilitate exchange of information with permittees and to improve program efficiency. Special care will be taken to advise citizen and conservation organizations; Federal, state and local natural resource management agencies; Indian Tribes; the media; commercial concessionaires; congressional liaisons; adjacent landowners and other concerned entities during the formulation of Shoreline Management Plans and subsequent revisions. Notices shall be published prior to public meetings to assure maximum public awareness. Public notices shall be issued by the district commander allowing for a minimum of 30 days for receipt of written public comment in regard to the proposed Shoreline Management Plan or any major revision thereto.

(7) *Periodic Review.* Shoreline Management Plans will be reviewed periodically, but no less often than every five years, by the district commander to determine the need for update. If sufficient controversy or demand exists, consideration should be given, consistent with other factors, to a process of reevaluation of the shoreline allocations and the plan. When changes to the Shoreline Management Plan are needed, the plan will be formally updated through the public participation process. Cumulative environmental impacts of permit actions and the possibility of preparing or revising project NEPA documentation will be considered. District commanders may make minor revisions to the Shoreline Management Plan when the revisions are consistent with policy and funds for a complete plan update are not available. The amount and type of public involvement needed for such revision is at the discretion of the district commander.

(f) *Instruments for Shoreline Use.* Instruments used to authorize private shoreline use facilities, activities or development are as follows:

(1) *Shoreline Use Permits.* (i) Shoreline Use Permits are issued and enforced in accordance with provisions of 36 CFR part 327.19.

(ii) Shoreline Use Permits are required for private structures/activities of any kind (except boats) in waters of Civil Works projects whether or not such

waters are deemed navigable and where such waters are under the primary jurisdiction of the Secretary of the Army and under the management of the Corps of Engineers.

(iii) Shoreline Use Permits are required for non-floating structures on waters deemed commercially non-navigable, when such waters are under management of the Corps of Engineers.

(iv) Shoreline Use Permits are also required for land vegetation modification activities which do not involve disruption to land form.

(v) Permits should be issued for a term of five years. To reduce administration costs, one year permits should be issued only when the location or nature of the activity requires annual reissuance.

(vi) Shoreline Use Permits for erosion control may be issued for the life or period of continual ownership of the structure by the permittee and his/her legal spouse.

(2) *Department of the Army Permits.* Dredging, construction of fixed structures, including fills and combination fixed-floating structures and the discharge of dredged or fill material in waters of the United States will be evaluated under authority of section 10, River and Harbor Act of 1899 (33 U.S.C. 403) and section 404 of the Clean Water Act (33 U.S.C. 1344). Permits will be issued where appropriate.

(3) *Real Estate Instruments.* Commercial development activities and activities which involve grading, cuts, fills, or other changes in land form, or establishment of appropriate land-based support facilities required for private floating facilities, will continue to be covered by a lease, license or other legal grant issued through the appropriate real estate element. Shoreline Management Plans should identify the types of activities that require real estate instruments and indicate the general process for obtaining same. Shoreline Use Permits are not required for facilities or activities covered by a real estate instrument.

(g) *Transfer of Permits.* Shoreline Use Permits are non-transferable. They become null and void upon sale or transfer of the permitted facility or the death of the permittee and his/her legal spouse.

(h) *Existing Facilities Now Under Permit.* Implementation of a Shoreline Management Plan shall consider existing permitted facilities and prior written Corps commitments implicit in their issuance. Facilities or activities permitted under special provisions should be identified in a way that will set them apart from other facilities or activities.

(1) Section 6 of Public Law 97–140 provides that no lawfully installed dock or appurtenant structures shall be required to be removed prior to December 31, 1989, from any Federal water resources reservoir or lake project administered by the Secretary of the Army, acting through the Chief of Engineers, on which it was located on December 29, 1981, if such property is maintained in usable condition, and does not occasion a threat to life or property.

(2) In accordance with section 1134(d) of Public Law 99–662, any houseboat, boathouse, floating cabin or lawfully installed dock or appurtenant structures in place under a valid shoreline use permit as of November 17, 1986, cannot be forced to be removed from any Federal water resources project or lake administered by the Secretary of the Army on or after December 31, 1989, if it meets the three conditions below except where necessary for immediate use for public purposes or higher public use or for a navigation or flood control project.

(i) Such property is maintained in a usable and safe condition,

(ii) Such property does not occasion a threat to life or property, and

(iii) The holder of the permit is in substantial compliance with the existing permit.

(3) All such floating facilities and appurtenances will be formally recognized in an appropriate Shoreline Management Plan. New permits for these permitted facilities will be issued to new owners. If the holder of the permit fails to comply with the terms of the permit, it may be revoked and the holder required to remove the structure, in accordance with the terms of the permit as to notice, time, and appeal.

(i) *Facility Maintenance.* Permitted facilities must be operated, used and maintained by the permittee in a safe, healthful condition at all times. If determined to be unsafe, the resource manager will establish together with the permittee a schedule, based on the seriousness of the safety deficiency, for correcting the deficiency or having it removed, at the permittee's expense. The applicable safety and health prescriptions in EM 385–1–1 should be used as a guide.

(j) *Density of Development.* The density of private floating and fixed recreation facilities will be established in the Shoreline Management Plan for all portions of Limited Development areas consistent with ecological and aesthetic characteristics and prior written commitments. The facility density in Limited Development Areas should, if feasible, be determined prior to the development of adjacent private property. The density of facilities will not be more than 50 per cent of the Limited Development Area in which they are located. Density will be measured by determining the linear feet of shoreline as compared to the width of the facilities in the water plus associated moorage arrangements which restrict the full unobstructed use of that portion of the shoreline. When a Limited Development Area or a portion of a Limited Development area reaches maximum density, notice should be given to the public and facility owners in that area that no additional facilities will be allowed. In all cases, sufficient open area will be maintained for safe maneuvering of watercraft. Docks should not extend out from the shore more than one-third of the width of a cove at normal recreation or multipurpose pool. In those cases where current density of development exceeds the density level established in the Shoreline Management Plan, the density will be reduced to the prescribed level through attrition.

(k) *Permit Fees.* Fees associated with the Shoreline Use Permits shall be paid prior to issuing the permit in accordance with the provisions of § 327.30(c)(1). The fee schedule will be published separately.

Appendix A to § 327.30—Guidelines for Granting Shoreline Use Permits

1. General

a. Decisions regarding permits for private floating recreation facilities will consider the operating objectives and physical characteristics of each project. In developing Shoreline Management Plans, district commanders will give consideration to the effects of added private boat storage facilities on commercial concessions for that purpose. Consistent with established policies, new commercial concessions may be alternatives to additional limited development shoreline.

b. Permits for individually or group owned shoreline use facilities may be granted only in Limited Development Areas when the sites are not near commercial marine services and such use will not despoil the shoreline nor inhibit public use or enjoyment thereof. The installation and use of such facilities will not be in conflict with the preservation of the natural characteristics of the shoreline nor will they result in significant environmental damage. Charges will be made for Shoreline Use Permits in accordance with the separately published fee schedule.

c. Permits may be granted within Limited Development Areas for ski jumps, floats, boat moorage facilities, duck blinds, and other private floating recreation facilities when they will not create a safety hazard and inhibit public use or enjoyment of project waters or shoreline. A Corps permit is not required for temporary ice fishing shelters or

duck blinds when they are regulated by a state program. When the facility or activity is authorized by a shoreline use permit, a separate real estate instrument is generally not required.

d. Group owned boat mooring facilities may be permitted in Limited Development Areas where practicable (e.g. where physically feasible in terms of access, water depths, wind protection, etc.).

2. Applications for Shoreline Use Permits

a. Applications for private Shoreline Use Permits will be reviewed with full consideration of the policies set forth in this and referenced regulations, and the Shoreline Management Plan. Fees associated with the Shoreline Use Permit shall be paid prior to issuing the permit. Plans and specifications of the proposed facility shall be submitted and approved prior to the start of construction. Submissions should include engineering details, structural design, anchorage method, and construction materials; the type, size, location and ownership of the facility; expected duration of use; and an indication of willingness to abide by the applicable regulations and terms and conditions of the permit. Permit applications shall also identify and locate any land-based support facilities and any specific safety considerations.

b. Permits will be issued by the district commander or his/her authorized representative on ENG Form 4264–R (Application for Shoreline Use Permit) (appendix B). Computer generated forms may be substituted for ENG Form 4264–R provided all information is included. The computer generated form will be designated, "ENG Form 4264–R–E, Oct 87 (Electronic generation approved by USACE, Oct 87)".

c. The following are guides to issuance of Shoreline Use Permits:

(1) Use of boat mooring facilities, including piers and boat (shelters) houses, will be limited to vessel or watercraft mooring and storage of gear essential to vessel or watercraft operation.

(2) Private floating recreation facilities, including boat mooring facilities shall not be constructed or used for human habitation or in a manner which gives the appearance of converting Federal public property on which the facility is located to private, exclusive use. New docks with enclosed sides (i.e. boathouses) are prohibited.

(3) No private floating facility will exceed the minimum size required to moor the owner's boat or boats plus the minimum size required for an enclosed storage locker of oars, life preservers and other items essential to watercraft operation. Specific size limitations may be established in the project Shoreline Management Plan.

(4) All private floating recreation facilities including boat mooring facilities will be constructed in accordance with plans and specifications, approved by the resource manager, or a written certification from a licensed engineer, stating the facility is structurally safe will accompany the initial submission of the plans and specifications.

(5) Procedures regarding permits for individual facilities shall also apply to permits for non-commercial group mooring facilities.

(6) Facilities attached to the shore shall be securely anchored by means of moorings which do not obstruct the free use of the shoreline, nor damage vegetation or other natural features. Anchoring to vegetation is prohibited.

(7) Electrical service and equipment leading to or on private mooring facilities must not pose a safety hazard nor conflict with other recreational use. Electrical installations must be weatherproof and meet all current applicable electrical codes and regulations. The facility must be equipped with quick disconnect fittings mounted above the flood pool elevation. All electrical installations must conform to the National Electric Code and all state, and local codes and regulations. In those states where electricians are licensed, registered, or otherwise certified, a copy of the electrical certification must be provided to the resource manager before a Shoreline Use Permit can be issued or renewed. The resource manager will require immediate removal or disconnection of any electrical service or equipment that is not certified (if appropriate), does not meet code, or is not safely maintained. All new electrical lines will be installed underground. This will require a separate real estate instrument for the service right-of-way. Existing overhead lines will be allowed, as long as they meet all applicable electrical codes, regulations and above guidelines, to include compatibility and safety related to fluctuating water levels.

(8) Private floating recreation facilities will not be placed so as to interfere with any authorized project purposes, including navigation, or create a safety or health hazard.

(9) The district commander of his/her authorized representative may place special conditions on the permit when deemed necessary.

(10) Vegetation modification, including but not limited to, cutting, pruning, chemical manipulation, removal or seeding by private individuals is allowed only in those areas designated as Limited Development Areas or Protected Shoreline Areas. An existing (as of July 1, 1987) vegetation modification permit, within a shoreline allocation which normally would not allow vegetation modification, should be grandfathered. Permittees will not create the appearance of private ownership of public lands.

(11) The term of a permit for vegetation modification will be for five years. Where possible, such permits will be consolidated with other shoreline management permits into a single permit. The district commander is authorized to issue vegetation modification permits of less than five years for one-time requests or to aid in the consolidation of shoreline management permits.

(12) When issued a permit for vegetative modification, the permittee will delineate the government property line, as surveyed and marked by the government, in a clear but unobtrusive manner approved by the district commander and in accordance with the project Shoreline Management Plan and the conditions of the permit. Other adjoining owners may also delineate the common boundary subject to these same conditions. This delineation may include, but is not limited to, boundary plantings and fencing. The delineation will be accomplished at no cost to the government.

(13) No permit will be issued for vegetation modification in Protected Shoreline Areas until the environmental impacts of the proposed modification are assessed by the resource manager and it has been determined that no significant adverse impacts will result. The effects of the proposed modification on water quality will also be considered in making this determination.

(14) The original of the completed permit application is to be retained by the permittee. A duplicate will be retained in the resource manager's office.

3. Permit Revocation

Permits may be revoked by the district commander when it is determined that the public interest requires such revocation or when the permittee fails to comply with terms and conditions of the permit, the Shoreline Management Plan, or of this regulation. Permits for duck blinds and ice fishing shelters will be issued to cover a period not to exceed 30 days prior to and 30 days after the season.

4. Removal of Facilities

Facilities not removed when specified in the permit or when requested after termination or revocation of the permit will be treated as unauthorized structures pursuant to 36 CFR part 327.20.

5. Posting of Permit Number

Each district will procure 5" × 8" or larger printed permit tags of light metal or plastic for posting. The permit display tag shall be posted on the facility and/or on the land area covered by the permit, so that it can be visually checked, with ease in accordance with instructions provided by the resource manager. Facilities or activities permitted under special provisions should be identified in a way that will set apart from other facilities or activities.

Appendix B to § 327.30—Application for Shoreline Use Permit (Reserved)

Appendix C to § 327.30—Shoreline Use Permit Conditions

1. This permit is granted solely to the applicant for the purpose described on the attached permit.

2. The permittee agrees to and does hereby release and agree to save and hold the Government harmless from any and all causes of action, suits at law or equity, or claims or demands or from any liability of any nature whatsoever for or on account of any damages to persons or property, including a permitted facility, growing out of the ownership, construction, operation or maintenance by the permittee of the permitted facilities and/or activities.

3. Ownership, construction, operation, use and maintenance of a permitted facility are subject to the Government's navigation servitude.

4. No attempt shall be made by the permittee to forbid the full and free use by

the public of all public waters and/or lands at or adjacent to the permitted facility or to unreasonably interfere with any authorized project purposes, including navigation in connection with the ownership, construction, operation or maintenance of a permitted facility and/or activity.

5. The permittee agrees that if subsequent operations by the Government require an alteration in the location of a permitted facility and/or activity or if in the opinion of the district commander a permitted facility and/or activity shall cause unreasonable obstruction to navigation or that the public interest so requires, the permittee shall be required, upon written notice from the district commander to remove, alter, or relocate the permitted facility, without expense to the Government.

6. The Government shall in no case be liable for any damage or injury to a permitted facility which may be caused by or result from subsequent operations undertaken by the Government for the improvement of navigation or for other lawful purposes, and no claims or right to compensation shall accrue from any such damage. This includes any damage that may occur to private property if a facility is removed for noncompliance with the conditions of the permit.

7. Ownership, construction, operation, use and maintenance of a permitted facility and/or activity are subject to all applicable Federal, state and local laws and regulations. Failure to abide by these applicable laws and regulations may be cause for revocation of the permit.

8. This permit does not convey any property rights either in real estate or material; and does not authorize any injury to private property or invasion of private rights or any infringement of Federal, state or local laws or regulations, nor does it obviate the necessity of obtaining state or local assent required by law for the construction, operation, use or maintenance of a permitted facility and/or activity.

9. The permittee agrees to construct the facility within the time limit agreed to on the permit issuance date. The permit shall become null and void if construction is not completed within that period. Further, the permittee agrees to operate and maintain any permitted facility and/or activity in a manner so as to provide safety, minimize any adverse impact on fish and wildlife habitat, natural, environmental, or cultural resources values and in a manner so as to minimize the degradation of water quality.

10. The permittee shall remove a permitted facility within 30 days, at his/her expense, and restore the waterway and lands to a condition accepted by the resource manager upon termination or revocation of this permit or if the permittee ceases to use, operate or maintain a permitted facility and/or activity. If the permittee fails to comply to the satisfaction of the resource manager, the district commander may remove the facility by contract or otherwise and the permittee agrees to pay all costs incurred thereof.

11. The use of a permitted boat dock facility shall be limited to the mooring of the permittee's vessel or watercraft and the storage, in enclosed locker facilities, of his/her gear essential to the operation of such vessel or watercraft.

12. Neither a permitted facility nor any houseboat, cabin cruiser, or other vessel moored thereto shall be used as a place of habitation or as a full or part-time residence or in any manner which gives the appearance of converting the public property, on which the facility is located, to private use.

13. Facilities granted under this permit will not be leased, rented, sub-let or provided to others by any means of engaging in commercial activity(s) by the permittee or his/her agent for monetary gain. This does not preclude the permittee from selling total ownership to the facility.

14. On all new docks and boat mooring buoys, flotation shall be of materials which will not become waterlogged, is not subject to damage by animals, is not subject to deterioration upon contact with petroleum products (gasoline, diesel fuel, oil, or other caustic substances) and will not sink or contaminate the water if punctured. No metal-covered or injected drum flotation will be allowed. Foam bead flotation may be authorized by the district commander if it is encased in a protective coating to prevent deterioration with resultant loss of beads. Existing flotation will be authorized until it has severely deteriorated and is no longer serviceable or capable of supporting the structure, at which time it should be replaced with approved flotation.

15. Permitted facilities and activities are subject to periodic inspection by authorized Corps representatives. The resource manager will notify the permittee of any deficiencies and together establish a schedule for their correction. No deviation or changes from approved plans will be allowed without prior written approval of the resource manager.

16. Floating facilities shall be securely attached to the shore in accordance with the approved plans by means of moorings which do not obstruct general public use of the shoreline or adversely affect the natural terrain or vegetation. Anchoring to vegetation is prohibited.

17. The permit display tag shall be posted on the permitted facility and/or on the land areas covered by the permit so that it can be visually checked with ease in accordance with instructions provided by the resource manager.

18. No vegetation other than that prescribed in the permit will be damaged, destroyed or removed. No vegetation of any kind will be planted, other than that specifically prescribed in the permit.

19. No change in land form such as grading, excavation or filling is authorized by this permit.

20. This permit is non-transferable. Upon the sale or other transfer of the permitted facility or the death of the permittee and his/her legal spouse, this permit is null and void.

21. By 30 days written notice, mailed to the permittee by certified letter, the district commander may revoke this permit whenever the public interest necessitates such revocation or when the permittee fails to comply with any permit condition or term. The revocation notice shall specify the reasons for such action. If the permittee requests a hearing in writing to the district commander through the resource manager within the 30-day period, the district commander shall grant such hearing at the earliest opportunity. In no event shall the hearing date be more than 60 days from the date of the hearing request. Following the hearing, a written decision will be rendered and a copy mailed to the permittee by certified letter.

22. Notwithstanding the conditions cited in condition 21 above, if in the opinion of the district commander, emergency circumstances dictate otherwise, the district commander may summarily revoke the permit.

23. When vegetation modification on these lands is accomplished by chemical means, the program will be in accordance with appropriate Federal, state and local laws, rules and regulations.

24. The resource manager or his/her authorized representative shall be allowed to cross the permittee's property, as necessary to inspect facilities and/or activities under permit.

25. When vegetation modification is allowed, the permittee will delineate the government property line in a clear, but unobtrusive manner approved by the resource manager and in accordance with the project Shoreline Management Plan.

26. If the ownership of a permitted facility is sold or transferred, the permittee or new owner will notify the Resource Manager of the action prior to finalization. The new owner must apply for a Shoreline Use Permit within 14 days or remove the facility and restore the use area within 30 days from the date of ownership transfer.

27. If permitted facilities are removed for storage or extensive maintenance, the resource manager may require all portions of the facility be removed from public property.

Appendix D to § 327.30—Permit (Reserved)

[FR Doc. 90-17535 Filed 7-26-90; 8:45 am]

THIS PAGE WAS
INTENTIONALLY LEFT BLANK

TRAMWAYS

1. Tramways will be constructed only in areas allocated for limited development in the approved Shoreline Management Plan and only to transport boats and related equipment.

2. Two sets of plans must be submitted that conform to tramway requirements attached. The design and plans for the proposed tramway should be prepared by a competent person, preferably an engineer, to minimize the chances of accidents resulting from design deficiencies. No structure will be authorized that will restrict public use of the shoreline. All structures will follow the natural contour of the ground. Tramways will not be permitted in areas of known or potential archeological significance or at sites where natural rock outcroppings or other geological formations would have to be removed or significantly altered. Tramways must be constructed at ground level.

3. Tramways should be constructed with materials that blend with the natural terrain (i.e., unpainted or natural colors paint on rails). The main electrical shutoff for the system will be located above the flood pool (el. 491). The right-of-way width will not exceed 10 feet. The layout of the tramway will provide for retention of existing vegetation or planting of vegetation and cover to conceal the tramway from view by those on the lake. Trees will not be cut. Immediate restitution is essential if there has been cutting of vegetation as a result of the tramway construction. This restitution can be accomplished by planting trees or other landscaping methods that will effectively compensate the Government for damages suffered.

4. The right-of-way for the construction of tramways may be authorized by an outgrant with a term not to exceed 5 years. The outgrant only authorizes construction of the tramway and the right to maintain the facility on Government property.

TRAMWAY REQUIREMENTS

A. GENERAL

1. Submit two sets of engineer drawings with all required details shown.
2. Tramway must extend above Elevation 491' and to private property.
3. Tramway must be constructed adjacent to and in front of owner's property.
4. Plans showing details of tramway, trolley, winch, and other details.
5. A licensed master electrician or registered electrical engineer must certify the electric service meets the National Electric Code.

B. TRACK

1. Spacing for concrete pedestal or supports - maximum 5'.
2. Rails permanently attached and anchored (welded, bolted, etc.).
3. All metal may be left unpainted. If painted, color must blend with ground and be approved by Resident Engineer/Manager.
4. Rails must follow contour of ground.
5. Track will be constructed with metal rails, metal pipe, or angle iron.
6. Maximum distance between rails - 4'.
7. Cross ties are prohibited.

C. WINCH

1. Winch must be bolted to a platform and anchored to land end of rails.
2. Winch will be powered by electrical reversible motor of sufficient horsepower to do the job adequately.
3. Minimum 1/4 inch cable shall be used on winch.
4. A fail safe brake system must be used.

D. TROLLEY

1. Frame shall be of metal construction with wide track and wheels 8 inch minimum diameter.
2. All exposed surfaces shall be painted with an approved type paint.

GREERS FERRY LAKE
NOTICE
INSTRUCTIONS ON USE OF ALL BOATS WITH
SLEEPING QUARTERS AND/OR MARINE SANITATION DEVICES

April 1985

In order for the public to enjoy the recreational resources of Greers Ferry Lake, consideration must be given to maintaining high standards of public health and water quality. The regulations contained in Title 36 as established by the Corps of Engineers and also, those of the Arkansas Department of Health are necessary to maintain the waters of Greers Ferry Lake as among the cleanest in the nation. We ask your cooperation in observing the following policies.

1. MARINE SANITATION DEVICES

a. You must have a U.S. Coast Guard approved no discharge type marine toilet installed on any boat with sleeping accommodations that is placed on the lake. A Corps of Engineers permit and numbered decals shall be obtained for any craft placed on the lake for any period exceeding three days. This permit will be issued after proof of installation of a no discharge system.

b. Discharge of sewage from craft equipped with U.S. Coast Guard approved holding tanks is permitted only at designated marine pumpout stations located at commercial marinas (Dam Site, Heber Springs, Eden Isle, Shiloh, Fairfield Bay and Choctaw).

2. MOORING

a. When not in use, all such vessels shall be removed from the lake or moored at a commercial marina. No vessel shall be operated or moored in prohibited areas of the lake as designated by the District Engineer. (See map.) Boats with sleeping quarters and/or marine sanitation device shall not be moored within ¼ mile of a park (except at marinas). No such boats shall be moored at any private dock.

b. At fixed points such as marinas, boats equipped with toilet facilities shall not be inhabited at a fixed or permanent mooring location. After boarding craft, move from marina to permissible areas, and upon returning to dock, remain aboard minimal time required to secure boat.

3. RESTRICTED AREAS

The area from the Dam to the mouth of Peter Creek is restricted to all boats with sleeping quarters and/or marine sanitation devices. (See map for limits of restricted area.) Boats permanently moored at Dam Site Marina should proceed upstream immediately after leaving dock until clear of the restricted area. A one-half mile area surrounding each of the three municipal water intake structures on the lake is also restricted with respect to boats with sleeping quarters and/or sanitary facilities. Please do not operate or anchor within these areas and within one-quarter mile of the shoreline adjacent to the parks. (See map.) The map showing restricted areas and these guidelines should be kept aboard your boat available for ready reference.

4. MARINE PUMPOUT STATIONS

As of this writing, marine pumpout stations are located at Heber Springs, Fairfield Bay, Shiloh, Eden Isle, Dam Site and Choctaw Marinas.

5. COMPLIANCE

Violation of any of the above will be cause for revoking of permit to operate and keep boat on the lake. Citations may be issued for failure to comply with regulations contained in Title 36.

For additional information, contact the Resident Engineer, (501) 362-2416.

EXHIBIT V

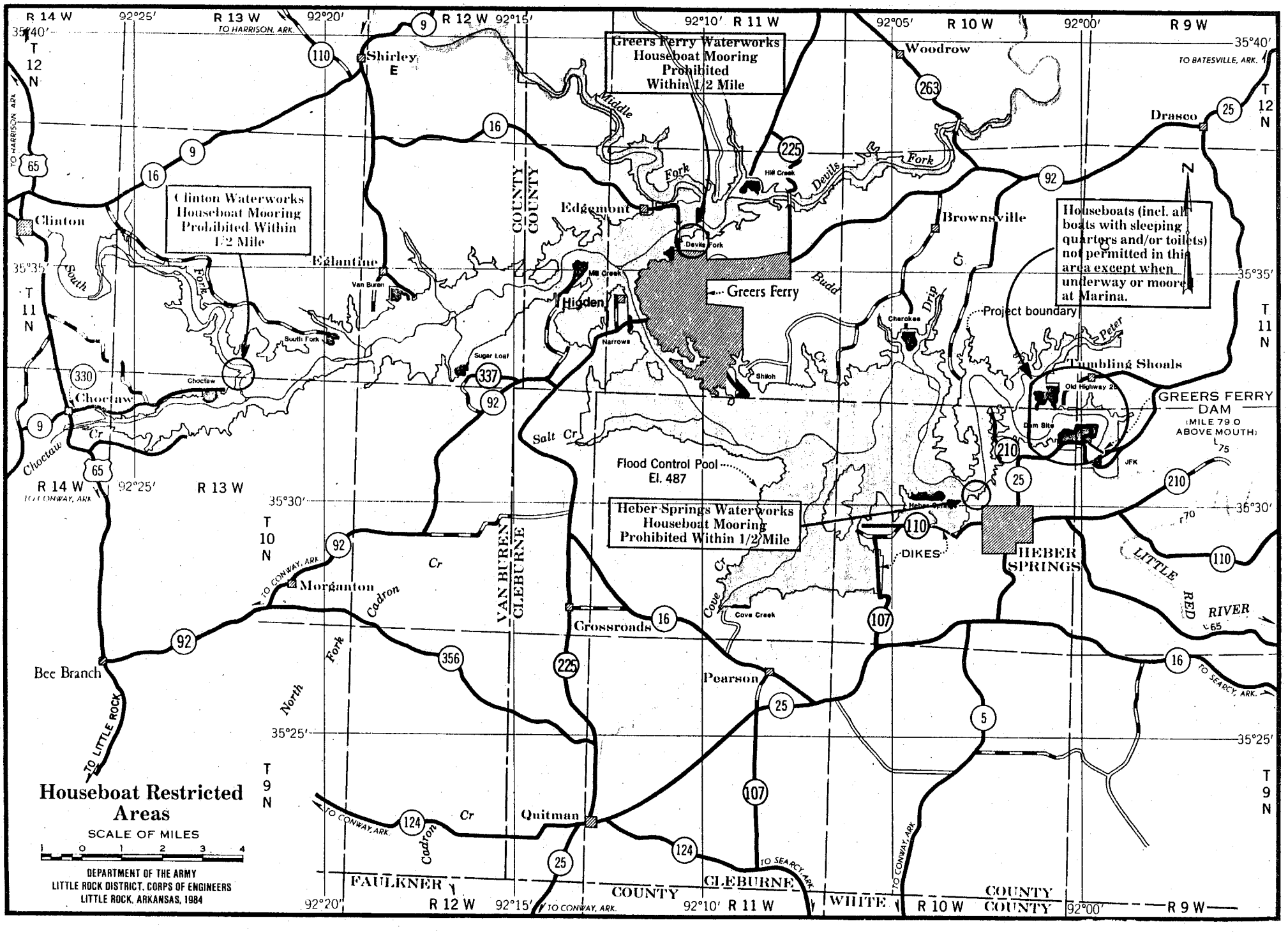
Houseboat Restricted Areas
SCALE OF MILES
1 0 1 2 3 4
DEPARTMENT OF THE ARMY
LITTLE ROCK DISTRICT, CORPS OF ENGINEERS
LITTLE ROCK, ARKANSAS, 1984
Greers Ferry Waterworks Houseboat Mooring Prohibited Within 1/2 Mile
Clinton Waterworks Houseboat Mooring Prohibited Within 1/2 Mile
Houseboats (incl. all boats with sleeping quarters and/or toilets) not permitted in this area except when underway or moored at Marina.
Heber Springs Waterworks Houseboat Mooring Prohibited Within 1/2 Mile
Greers Ferry
Project boundary
Flood Control Pool El. 487
GREERS FERRY DAM (MILE 79.0 ABOVE MOUTH)
DIKES
HEBER SPRINGS
Shirley
Woodrow
Drasco
Clinton
Eglantine
Edgemont
Brownsville
Higden
Tumbling Shoals
Choctaw
Morganton
Crossroads
Pearson
Quitman
Bee Branch
Cherokee
Hill Creek
Devils Fork
Mill Creek
Narrows
Sugar Loaf
Van Buren
South Fork
Choctaw
Shiloh
Old Highway 25
Dam Site
JFK
Heber Springs
Cove Creek
Middle Fork
Devils Fork
Budd Cr
Drip Cr
Peter
Salt Cr
Cove Cr
Cadron Cr
North Fork
South Fork
Choctaw Cr
LITTLE RED RIVER
VAN BUREN COUNTY
CLEBURNE COUNTY
FAULKNER COUNTY
WHITE COUNTY
TO HARRISON, ARK.
TO BATESVILLE, ARK.
TO CONWAY, ARK.
TO SEARCY, ARK.
TO LITTLE ROCK
R 14 W
R 13 W
R 12 W
R 11 W
R 10 W
R 9 W
T 12 N
T 11 N
T 10 N
T 9 N
92°25′
92°20′
92°15′
92°10′
92°05′
92°00′
35°40′
35°35′
35°30′
35°25′

A GUIDE TO SHORELINE USE
GREERS FERRY LAKE

GENERAL

The primary objective of the Corps of Engineers in the management of Greers Ferry Lake is to insure the general public full recreational enjoyment and to improve wildlife habitat on public lands and waters both now and for future generations. A management plan has been developed that is designed to insure maximum benefit to the general public while protecting project resources.

Ownership of private land adjoining Government property does not convey any exclusive or preferential rights to the use of the lake or adjoining public lands.

This guide has been compiled in an effort to provide you with general information concerning activities permitted on Government-owned lands around Greers Ferry Lake. It outlines the procedures required to apply for permits or licenses for various activities or use of Government-owned lands. Space does not permit a complete listing of all possible activities, but this discussion covers most of them. Complete Rules and Regulations governing public use of Corps of Engineers projects are contained in Part 327 of Title 36 CFR. Copies of these Rules and Regulations are available at the Greers Ferry Resident Office.

PRIVATE FLOATING RECREATIONAL FACILITIES (Boat Docks, Floats, and Mooring Buoys)

Private floating recreational facilities are permitted only in areas designated for limited development (zoned areas). A map showing the location of these limited development areas is on display at the Resident Office near Heber Springs, Arkansas. Limited development areas depend upon ecological and aesthetic values and the availability of satisfactory mooring areas. Docks and other private floating facilities will not be allowed in close proximity to developed or future parks, shallow areas, natural areas and reaches of the shoreline subject to exposure to winds and wave action. The number of private floating facilities permitted in any given area will be limited by a minimum spacing of 100 feet.

Applicants for floating facilities in the limited development areas must have ready access to the shoreline either by public road, ownership of adjoining property, or right-of-access across adjoining property. Ownership of land adjacent to Government property is not required. The facility must serve as the home port moorage for the applicant's boat(s) and the owner of each boat in a dock must also own an interest in the dock. An individual will not be permitted more than one

private floating facility. A maximum of two stalls may be permitted per individual permittee if the applicant has two boats duly registered in his name and two stalls are required to house the boats. Private floating facilities must meet or exceed the minimum design standards developed by the Corps of Engineers. Flotation material must be approved by the Corps of Engineers. A closed-cell or coated type foam approved by the Corps is required. A copy of these standards is available at the Greers Ferry Resident Office. Dock plans must be approved prior to construction and the dock must be inspected at the time of installation. Rangers will inspect each permitted facility at least annually for compliance with existing standards for the type of facility. Noncompliance with the terms of the permit or the standards will be grounds for revocation of the permit and removal of the dock may be required.

TRAMWAYS

Construction of tramways is permitted only in areas for limited development (zoned areas) in the approved Shoreline Management Plan.

Standard regulations for the construction and designing of tramways can be obtained at the Greers Ferry Resident Office. The tracks (rails only permitted) should be constructed with materials that will blend with the natural terrain. The tramway must follow the contour of the natural terrain. Grading may not be performed to make the shoreline suitable for construction of a tramway. The structure must be authorized or approved by the Corps of Engineers and must not restrict public use of the shoreline.

The right-of-way for the construction of tramways may be authorized by an outgrant with a term not to exceed 5 years. The outgrant only authorizes construction of the tramway and the right to maintain the facility on Government property. An individual may have a tramway or a private dock, but not both.

ELECTRIC LINES

Electric lines, including those to private boat docks, must be licensed or otherwise approved by the Corps of Engineers and must meet all local and state codes and the National Electric Code in effect at the time of installation.

PATHS AND MOWING

No access path or mowing may be performed on Government property without a valid shoreline use permit. Application forms and assistance are available at the Greers Ferry Resident Office. All applications must be accompanied by a drawing to show the complete scope of work. An onsite inspection by a ranger is required prior to issuance of a permit. Applications are considered on a case by case basis. Permit limitations are

determined by the impact the proposed work might have on natural shoreline appearance, wildlife habitat, water quality, ecological balance and adequate fire protection.

ACCESS PATHS

Pedestrian access paths, six feet or less in width, may be maintained to the shoreline only after a permit has been issued by the Resident Office. The path must follow a meandering route to prevent erosion and to avoid the need for removal of trees and vegetation. The use permit does not convey the right to construct any structure (steps, bridges, or excavation with fill, etc.) in connection with the path. Paths should be located at the junction of two lot lines if in a platted subdivision, thus allowing for use of path by multiple parties. Applicant must own the lot contiguous to the Government boundary prior to obtaining an access path permit.

MOWING

Mowing of Government property may be permitted for fire protection purposes only. The limits of this mowing will be dependent on the proximity of privately-owned dwellings to the Government boundary. A maximum mowed radius of 50' from buildings is considered adequate for fire protection. This is the **maximum** that can be mowed if the dwelling is situated directly adjacent to the Government boundary line. If the residence is located within 50' of the line, mowing may be accomplished a maximum of 50' from the residence. This would result for instance, in mowing being permitted only 10' on the Government land when the house is 40' from the property line. A ranger must inspect the area that is proposed to be mowed and a permit issued before mowing is begun.

PERMITS NONTRANSFERABLE

When private property (adjacent to Government property) is sold, any valid lakeshore use permit held by the previous owner will be voided. Potential buyers or new owners should not assume that a new permit will automatically be issued. Also, if a new permit is issued, it should not be assumed that it will contain the same provisions as previous permits. It is recommended that potential buyers of private property contact the Greers Ferry Resident Office to clarify permit requirements for the adjacent Government property.

PROJECT BOUNDARY LINE

Almost all of the 276-mile boundary of Greers Ferry has been surveyed and monumented. The boundary line is defined by surveyed monuments placed at ground level at each angle point in the line. The survey markers are 3-1/2" diameter, round, brass caps and are stamped to show the monument number, the year surveyed, and the agency Little Rock District, Corps of

Engineers, U.S. Army. A 5' white, steel fence post is set approximately one foot from the survey marker or monument as an aid to location. The project boundary is a straight line between survey markers. The elevation and distance between these survey markers varies. Some trees along the boundary line are marked with a 3" wide white band as an additional aid to location of the line. These trees, however, are usually off-line and only indicate that the line is nearby. Rangers from the Resident Office are available to assist in location of the boundary line.

FLOWAGE EASEMENT LAND

When land was purchased for Greers Ferry Lake, the acquisition policy did not require the purchase of all the land to be flooded. Land that would be flooded infrequently and only at extremely high lake levels remained in private ownership but the Government paid the original owner for perpetual flowage easement rights. In the lower portion of the lake flowage easement was purchased to the 491 foot contour. In the upper tributaries, the flowage easement was purchased above 491' to 492, 493, and 494' elevation, mean sea level to accommodate higher water conditions due to the high inflow and backup conditions which occurs in these areas during very heavy rains and runoff conditions.

The flowage easement permanently grants to the Government the right to flood the easement land periodically when necessitated by the need to hold flood waters in the lake and to require that landowner to obtain approval prior to construction or placement of structures on the flowage easement land. No habitable structure or attachment thereto can be constructed below the flowage easement elevation, and no septic system can be placed below the flowage easement elevation. A more complete description of the rights granted under a flowage easement may be found in the landowner's property title or by inquiring at the Resident Office.

APPLICATIONS

The first step in submitting an application for any accepted activity is to contact the Greers Ferry Resident Office in Heber Springs, Arkansas. The office is located 3 miles north of Heber Springs on State Highway 25. Telephone: (501) 362-2416. Office hours are 7:30-4:00, Monday - Friday, except legal holidays.

Your interest and assistance in preservation of the natural beauty of the lake shoreline will be appreciated both now and in the future.

For additional information please contact the Resident Engineer, P.O. Box 1088, Heber Springs, Arkansas 72543.

Instructions for Completing Private Dock Permit Applications and Associated Forms

Applicants will be provided with instructions and one or more forms, as applicable, to facilitate the issuance of a Shoreline Use Permit for a private boat dock. The various forms contained in the packet of information are described below. Copies of the forms that are not included in other exhibits of this plan have been reproduced and included in this exhibit.

1. Shoreline Use Permit (Exhibit 2, Appendix B)- Complete and sign both copies. Under description block, please note the dock's location and Corps Boat Permit Number for each boat to be moored in the dock. Every stall owner must read the 27 conditions (Exhibit 2, Appendix C) attached to the permit. Return both copies to the Greers Ferry Resident Office.

2. Agreement of Responsibility for Care of Private Floating Facility - If you are not a full time resident, please identify an individual who will care for the dock in your absence. Have this person complete the Agreement of Responsibility form and sign the Shoreline Use Permit (Exhibit 2, Appendix B) in the appropriate block.

3. Corps Boat Permit Application - Every boat moored in a dock must display a numbered Corps of Engineers Boat Decal. Each dock owner and/or community dock member should complete and return this form for any boats moored in the dock which do not have a numbered decal.

4. Community Boat Docks - Several additional forms must accompany an application for a community boat dock.

a. Community Dock Owners Association Agreement (Exhibit II, Appendix E)- Each owner/member in the community dock must complete and have the form notarized. Fully executed copies should accompany the application when it is returned to the Greers Ferry Resident Office.

b. Contract for Sale of Stalls in Community Boat Docks - Upon construction of a new dock or sale of a stall in an existing dock, the contract for sale of stall form (Exhibit II, Appendix, E) must be completed, notarized, and filed with the County Clerk. Fully executed copies of the recorded form must be returned to the Greers Ferry Resident Office.

c. Additional Conditions of Permit for Community Docks - Each owner/member must read and agree to comply with the added conditions 28 through 47. The principal permittee must sign one copy and return it with the community dock permit application. The amount of liability insurance will be noted below the signature.

d. Community Dock Member's Register - Each owner/member must sign, note address and stall number owned.

5. Minimum Construction and Maintenance Requirements for Private Floating Facilities. These requirements are outlined in Exhibit II, Appendix G. The information package provided by the Greers Ferry Resident Office also contains a private dock check list and typical sections.

6. Additional Conditions of Permit for Private Floating Facilities with Electrical Service -

a. Each owner/member must read and agree to comply with the added conditions of the form in this packet. The principal permittee must sign one copy and return it to the Greers Ferry Resident Office with the permit application.

b. All docks with electrical service must be inspected by a licensed electrician. The electrician must complete the Electrical Certification Form (Exhibit II, Appendix F) certifying that dock meets current requirements of National Electric Code for floating buildings, docks, marinas, etc.

7. Flotation Materials. Exhibit VIII provides a list of known suppliers of coated flotation materials and extruded polystyrene flotation material.

DEPARTMENT OF THE ARMY
LITTLE ROCK DISTRICT, CORPS OF ENGINEERS
GREERS FERRY RESIDENT OFFICE
HEBER SPRINGS, ARKANSAS 72543

_____
date

APPLICATION FOR PRIVATE DOCK ON GREERS FERRY LAKE

1. Location of dock must be in a zoned area. Zoned lakeshore for the proposed dock is at _____. You should receive a letter and map describing the approved location for the dock.

2. Decide what kind of dock you want and submit two sets of good drawings for approval. Also return application forms with the drawings. Drawings should show all details of basic construction and meet or exceed the enclosed minimum specifications set by the Corps of Engineers:

A. Plans may be of your own design provided they meet the minimum specifications.

B. Plans may be submitted from prefabricated dock kits. (Several companies have docks which meet or exceed the minimum specifications.)

PLEASE NOTE: DO NOT SEND CHECK FOR THE PERMIT AT THIS TIME!

3. Plans approved /___/, or not approved /___/ and one set returned to you.

4. Construct dock according to plans within one year of approval of plans.

5. Contact this office when the dock is completed. After a final inspection, a permit will be issued for the dock. The permit fee is $30.00 for a five year permit. Check should be made payable to FAO, U.S. Army, Little Rock District.

** PLEASE DO NOT SEND CHECK UNTIL DOCK IS COMPLETED!

DEPARTMENT OF THE ARMY
LITTLE ROCK DISTRICT, CORPS OF ENGINEERS
GREERS FERRY RESIDENT OFFICE
P.O. BOX 1088
HEBER SPRINGS, ARKANSAS 72543

Date: _____

To: Mr./Ms. _____

This letter is to advise you that your proposed location for placement of a private floating facility is within a zoned portion of Greers Ferry Lake shoreline; however, as explained below, this statement does not constitute approval to place a private dock on the waters of Greers Ferry Lake. The following describes the proposed dock location:

U.S. Army Corps of Engineers property adjacent to

Lot No. _____

Subdivision _____

Other Description _____

_____(optional)

Please understand that you have not yet attained approval to place a dock nor have you been granted any specific rights related to future placement of a dock along this shoreline area. Until a site inspection is conducted, formal application is made and dock plans are submitted to the Resident Engineer, other requests for placement of docks will be considered. The approval of dock plans at Greers Ferry Lake is valid for one year only. Should the dock not be completed within the one year, the approval is no longer valid and resubmittal of plans and reissuance of authorization will be required. You may contact this office at any time should you wish to know of other interested parties who may be preparing application to place a dock at this location.

In addition to zoning, several other criteria must be met before approval to place a dock is granted. Docks may only be placed where a minimum 100 ft. buffer can be maintained between the proposed dock and nearest adjacent docks. You must have legal access to the dock location either from adjacent private property or nearby public access to lake (within 200 ft of dock). The location must be physically suited to a dock, i.e. adequate water depth, acceptable shoreline slope for access, etc. Failure to meet any one of these criteria may lead to denial of a formal application to place a dock at a particular location.

In certain locations around the lake, where 50% of the zoned shoreline is occupied by docks or future high dock demand is anticipated, a "community docks only" restraint may by implemented by the Resident Engineer. Under this condition, you may be required to allow others to add stall(s) to your dock in the future as requests are received and approved by the Resident Engineer in order to make maximum use of remaining zoned shoreline.

If you have any questions related to placement of a dock on Greers Ferry Lake, please contact this office at 501-362-2416.

AGREEMENT OF RESPONSIBILITY
FOR CARE OF PRIVATE FLOATING FACILITY

Date _____

Permit No. _____

Resident Engineer
U.S. Army Corps of Engineers
Greers Ferry Resident Office
P.O. Box 1088
Heber Springs, Arkansas 72543

Dear Mr. Garner:

I hereby assume responsibility for looking after

___ Private Dock

___ Community Dock

___ Mooring Buoy

owned by _____ located adjacent to

lot _____ in _____ Subdivision.

I understand that I will be responsible for the facility on a 24-hour-day basis and that I will perform necessary maintenance to the facility off the shoreline and properly attached to an approved anchor system.

Adjustments to mooring lines and similar routine maintenance will be performed as needed or required.

A description of procedure to be observed in daily inspection of the facility is as follows:

_____

_____

_____

Signature _____

Address _____

_____

Telephone No. _____

****
*   *
*   THIS PAGE WAS   *
*   INTENTIONALLY LEFT BLANK   *
*   *
****

ALL REQUESTED INFORMATION MUST BE FURNISHED

APPLICATION TO PLACE AND OPERATE PRIVATELY-OWNED FLOATING CRAFT ON GREERS FERRY LAKE

TO: Resident Engineer
U. S. Army Engineer Office, Greers Ferry
P. O. Box 1088
Heber Springs, Arkansas 72543

1. I or we, _____ own or propose to construct the following described floating craft, and hereby apply for a permit to place and operate the craft on the above named lake. It is understood and agreed that the permit does not authorize use of the floating craft for commercial purposes and also that the permit is subject to cancellation if the craft is not operated and maintained with reasonable safety precautions and in accordance with the rules and regulations which have been read by all signers of this application, applicable to the lake.

2. Type of craft and description: Boat - Houseboat, cabin cruiser, barge, sail, speed, row, canoe, or other (specify) _____. Exact location where boat is docked: _____ Boat Dock; adjacent to property, Lot _____ _____ Subdivision; or other (specify) _____.
NOTE: If boat is moored adjacent to property other than boat owner's, written permission from property owner must be attached to this application.
Year Model _____ Color _____ Maximum Rated HP of boat _____.
Square or Pointed Bow _____.

3. Manufactured by _____ Address _____
If boat is homemade, two sets of detailed construction plans must be attached to this application.

4. Hull Material: Wood, Metal, Fiberglas, Other (specify) _____.

5. Size: Length _____ Beam or Width _____.

6. Motor: Inboard or Outboard, Number of motors - 1, 2, or more; horsepower of each motor _____ Year Model _____ Name Brand _____.

7. Capacity: Passengers _____, stalls _____, bunks _____.

8. Sanitary Facility: NO._____, type: Marine, Chemical, Holding Tank.

9. Buoyance Material: Barrels, Tanks, Styrofoam, Other (specify) _____.

10. STATE REGISTRATION NUMBER _____.

SIGNATURE OF APPLICANT _____
Street or P. O. Address _____
City, State and Zip Code _____

THIS PAGE WAS
INTENTIONALLY LEFT BLANK

COMMUNITY DOCKS

The following conditions govern the issuance of permits for community docks and are in addition to the 27 conditions set forth with Application for Shoreline Use Permit, ENG Form 4264-R, dated Oct 90.

28. Members will either incorporate or form a dock owners association and elect a president who will be responsible to assure that the dock is maintained in accordance with recommended standards of the Corps and will also be responsible to comply with all conditions of the permit. The names, addresses, and signatures of all members will be furnished on the Members' Register. A Community Dock Owner's Association Agreement must be completed, notarized, and furnished. This agreement form is provided in the dock application package.

29. Users of community docks must own an undivided interest proportionate to use in the dock and each member will be obligated to bear a proportional share of maintenance and upkeep expenses.

30. It will be the responsibility of community dock members to obtain written permission of landowners of privately-owned land to assure access by land to project boundary, if necessary, prior to issuance of the dock permit. Approval of the dock location must be obtained and construction plans approved before construction is started on the dock.

31. A description of each boat to be housed in the dock will be furnished and each boat will have a Corps of Engineers boat permit issued. An individual may have a maximum of two slips in any new dock. The number of stalls constructed will not exceed the number of boats to be moored by members in the dock. The maximum size dock to be constructed at any location will be determined by the Resident Engineer. Valid boat registrations will be used to verify slip occupancy/ownership.

32. No boats or boat stalls may be rented at community docks and guests may not moor their boats at community docks except for temporary use not to exceed one day. No commercial activities will be permitted on the dock or on Government lands adjacent thereto. Commercial activities are defined as including but not limited to the sale, rental, or demonstration of materials, equipment, supplies or the offering of personal services.

33. A permit for a community dock does not give the members any exclusive rights with regard to the use of Government lands for access, parking, or utilities to serve the dock nor to remove vegetation or trees or to construct breakwaters to protect the dock from wave damage or install buoys to restrict speeds of passing boats.

34. When a share of a community dock is sold, the name and address of the new member will be furnished and the permit may neither be transferred nor assigned without the permission of the Resident Engineer. A Contract for Sale of Community Boat Docks will be completed, notarized, and recorded by the County Clerk and furnished to this office. The attached Contract for Sale sample or similar instrument may be used.

35. The shoreline adjacent to community docks will be kept clean by the dock members and maintained free of litter and debris including building materials.

36. Permits for community docks will be issued only when supervision by the permittee or his authorized representative will be provided on a 24-hour basis in accordance with Title 36, Chapter III, Code of Federal Regulations and a surveillance plan is furnished. The application will state whether surveillance will be provided by one of the owners or by a third party. If surveillance is provided by a third party, he must sign the application form thereby indicating that he accepts the responsibility and intends to carry out the provision of a surveillance plan. The surveillance plan should contain the following information:

a. Name of responsible party.

b. Local address.

c. Third party must have access to a telephone and provide the number.

d. Description of procedure to be observed in daily inspection of the dock.

e. A statement that adjustments in mooring lines and similar routine maintenance will be performed as needed or required.

Completing the Agreement of Responsibility for Care of Private Floating Facility form will provide the necessary surveillance plan information. This form is provided in the dock application package.

37. A majority vote of the owners of the community dock shall determine the type and amount of insurance carried on the dock as indicated on condition 2 of the Community Dock Owners Association Agreement. Minimum liability coverage will be $100,000 and the cost of coverage will be stated.

38. In conducting activities on the boat dock, the permittee shall comply with all State, Federal, and local laws and codes in regard to air and water pollution and solid waste disposal.

39. The right is hereby reserved to the United States, its officers, agents, and employees, to enter upon the dock at any time for inspection and for any purpose necessary or convenient in connection with Government work, and the permittee shall have no claim for damages of any character or account thereof against the United States or any officer, agent, or employee thereof.

40. The permittee shall be responsible for any damage that may be caused to Government property by the dock and shall exercise due diligence in the protection of all improvements, timber, and other property of the United States against fire or damage from any and all other causes.

41. The United States shall not be responsible for damages to the property or injuries to the person of the permittee, officers, agents, servants, or employees or others who may be on the premises at their invitation or the invitation of any one of them, arising from or incident to any Governmental activities on the premises, and the permittee shall hold the United States harmless from any and all such claims.

42. The permittee shall not discriminate against any person or persons because of race, color, creed, or national origin or location of residence in conduct of operations on the premises.

43. The permittee may expand the community dock upon approval by the Resident Engineer. However, no expansion or alteration may be accomplished unless or until detail plans and specifications and location shall have been approved in writing by the Resident Engineer.

44. It will be the responsibility of all community dock owners to provide for general safety at all such docks. The permittee will comply with Little Rock District, Corps of Engineers, safety requirements regarding private boat docks. Each dock shall be subject to an annual safety inspection by the Resident Engineer.

45. Failure or refusal to comply with the above will be a violation of the conditions of the permit and grounds for revocation of the permit.

46. The permit may be relinquished by the permittee by giving 60 days prior written notice to the Resident Engineer. The dock shall remain the property of the permittee if it is relinquished.

47. On or before the date of expiration of this permit when it is not to be renewed, or its termination by the permittee, the permittee shall vacate the premises, remove the property of the permittee therefrom, and restore the premises to a condition satisfactory to the District Engineer. If, however, this permit is revoked, the permittee shall vacate the premises, remove said property therefrom, and restore the premises to the condition aforesaid within such time as the District Engineer may designate. In either event, if the permittee shall fail or neglect to remove said property and so restore the premises, then, at the option of the Secretary of the Army, said property shall either become the property of the United States without compensation therefor, or the Secretary of the Army may cause it to be removed and the premises to be restored at the expense of the permittee, and no claim for damages against the United States or its officers or agents shall be created by or made on account of such removal and restoration work.

_____ _____

Date

Signature of Applicant
(PRESIDENT OF ASSOCIATION)

(All owners sign Member's Register)

COMMUNITY DOCK: Members' Register

Name of Corporation or Association and Address:

_____

_____

_____

_____

By signing below, I certify that I have read and agree to comply with the 27 conditions as set forth with Application for Shoreline Use Permit, ENG Form 4264-R, dated Oct 90, additional conditions 28-47 for Community Docks, and the Community Dock Owners Association Agreement.

Signature and Address

Stall No. _____ _____

_____

_____

Stall No. _____ _____

_____

_____

Stall No. _____ _____

_____

_____

Stall No. _____ _____

_____

_____

THIS PAGE WAS
INTENTIONALLY LEFT BLANK

PRIVATE DOCK CHECK LIST FOR GREERS FERRY LAKE 3-20-92

PLANS

____ Submit two sets of good complete plans. Utilize standard drawing size paper, suggested sizes: 24" X 36", 18" X 30", etc.

____ Show details on all materials, and construction.

____ Plans must be approved before construction.

FLOTATION

____ closed cell or encased foam, GFRO approved, NO BEAD TYPE See list of approved flotation and suppliers.

____ Fasten with galvanized bolts and ties.

____ Show calculations that assure 8" clearance between water and substructure

____ Show details on placement and attachment.

SUBSTRUCTURE

____ treated lumber

____ joists and framing, 2" x 8"

____ floor joists min. 24" O.C. (any direction)

____ metal equivalent of above (recommend hot dipped galvanized; if painted, must be primed + 2 coats approved paint)

DECKING

____ treated lumber, main deck and walkway

____ decking, min. 2" x 6"

____ expanded metal equivalent (must be galvanized)

ROOF SUPPORTS AND COLUMNS

____ wood, 4" x 4" on 4' centers (recommend treated)

____ metal, 1 1/4" pipe on 4' centers; 2" X 2" x 3/16" tubing on 4' centers

____ bolted through 2" x 8" substructure or metal equiv.

WOOD ROOF

____ rafters, 2" x 6", 24" O.C.; purlins, 2" x 4", 30" O.C.

____ roof decking, 1" tongue and groove or 1\2" plywood

____ roofing shingles (composition or wood)

____ roof pitch (min. slope), 4 on 12 slope

METAL ROOF

____ roofing, 28 gauge steel or .032" aluminum

____ rafters, 1 1/4" pipe; purlins, 1" pipe; Z purlins OK

____ roof pitch,

WALKWAY

____ width, 3' min - 4' max

____ decking, 2" x 6" treated wood; joists 2' O.C.

____ substructure, 2" x 8" treated wood or metal equiv.

____ attachment of ramp:

____ a. 1/4" x 4" x 18" steel plate for bracket

____ b. 3/4" pin or bolt

____ length of walkway, recommend walkway longer than standoffs

____ handrails, 20 and 42 inches on at least one side

____ walkway stability, free of excessive movement

HANDRAILS

____ wood, 2" x 4"

____ metal, 1" square tubing or 1 1/2" x 1 1/2 " x 1/4" angle

____ height, 20 and 42 inch from decking

____ location, front and sides of main dock, one side walkway

Handrail Attachment:

____ a. support posts secured through substructure

____ b. rails attached to 4" x 4" support posts or metal equiv., min. of 2 points attachment, 8" apart

ANCHOR SYSTEM

____ cable, 3/8" steel or aluminum (recommended); 5/8 " nylon rope

____ anchor bolts, set flush into shoreline with concrete see attached drawing

____ location, require two sets, high (475' msl) and low (461' msl) elevation

____ standoffs

____ a. min. size, 4' x 10' with bracket (4" x 6" x 3/8" ears) for pins

____ b. pipe, min. 2" dia.

____ c. bracket, 2 for each standoff

____ (1) 1/4" x 4" x 18" plate mounted on dock

____ (2) 3/4" pin or bolt

____ winches recommended for anchor cables and standoffs

____ NO CABLES OR ROPES TO TREES

PAINTING OR STAINING

____ primer, suitable for material (must specify)

____ color, brown, tan,or earth tones

____ min. coats, one prime - two finish

____ min. area to be painted, exposed surfaces above water line
*exceptions: treated wood, galv. steel

UNDERWATER BRACE

____ (recommended but not required)

*ITEMS NOT APPROVED

____ NO sun decks, swim docks, diving boards or platforms, walkways over 4' wide, or enclosed docks

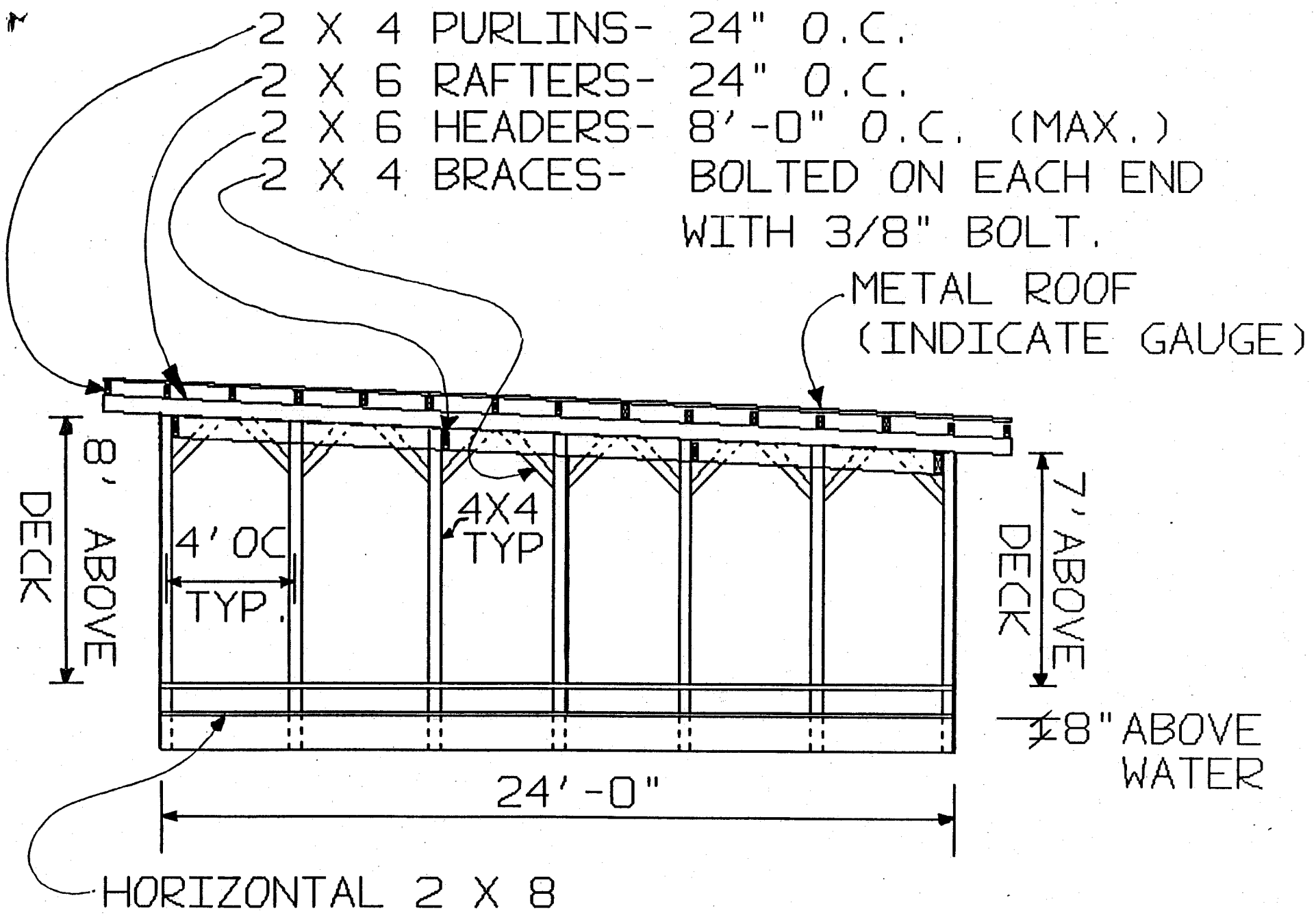

ROOF SUPPORT RECOMMENDATIONS

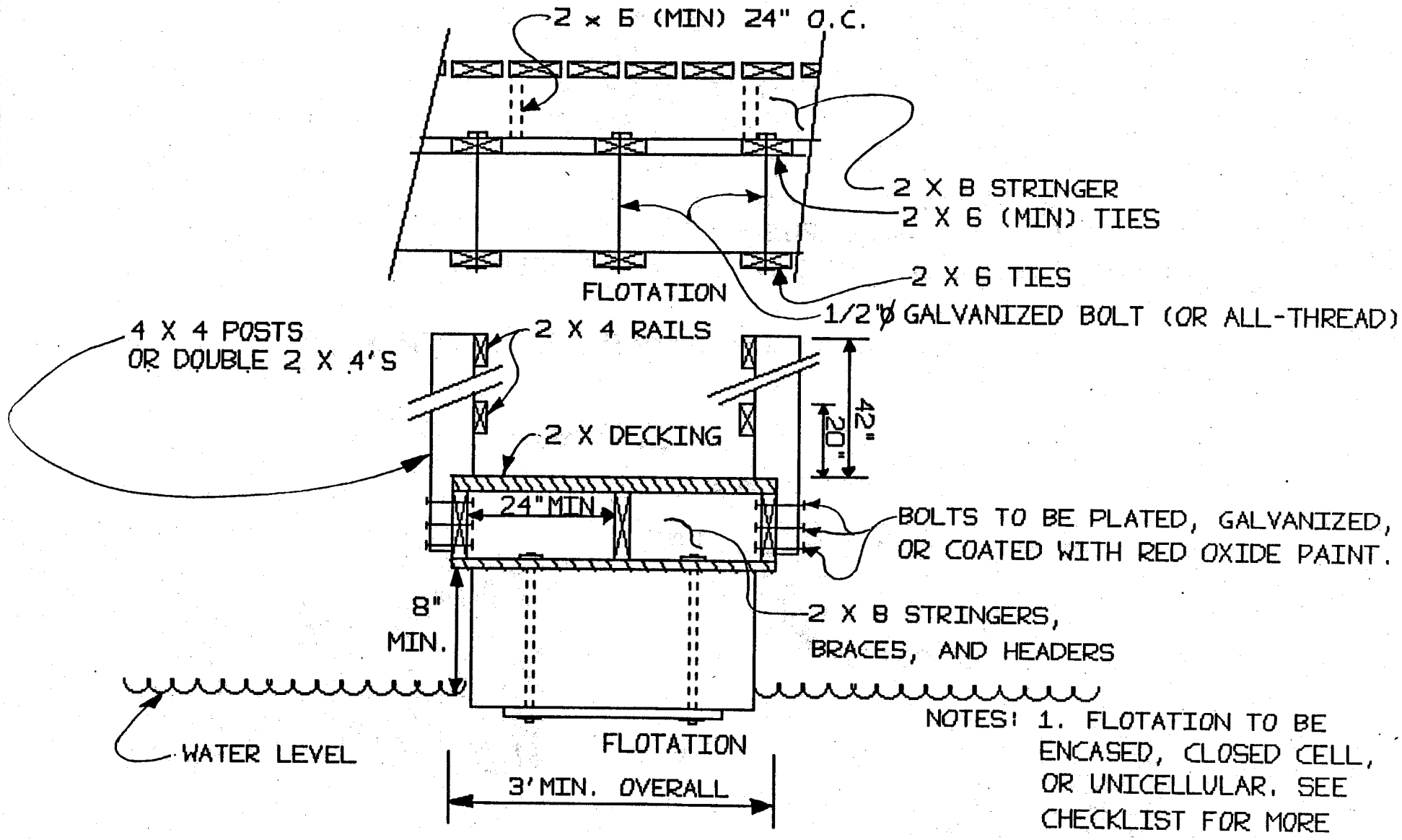

TYPICAL FLOTATION RACK FOR WALKWAY

NOTES: 1. FLOTATION TO BE ENCASED, CLOSED CELL, OR UNICELLULAR. SEE CHECKLIST FOR MORE INFORMATION.

2. RECOMMEND LUMBER TO BE PRESSURE-TREATED.

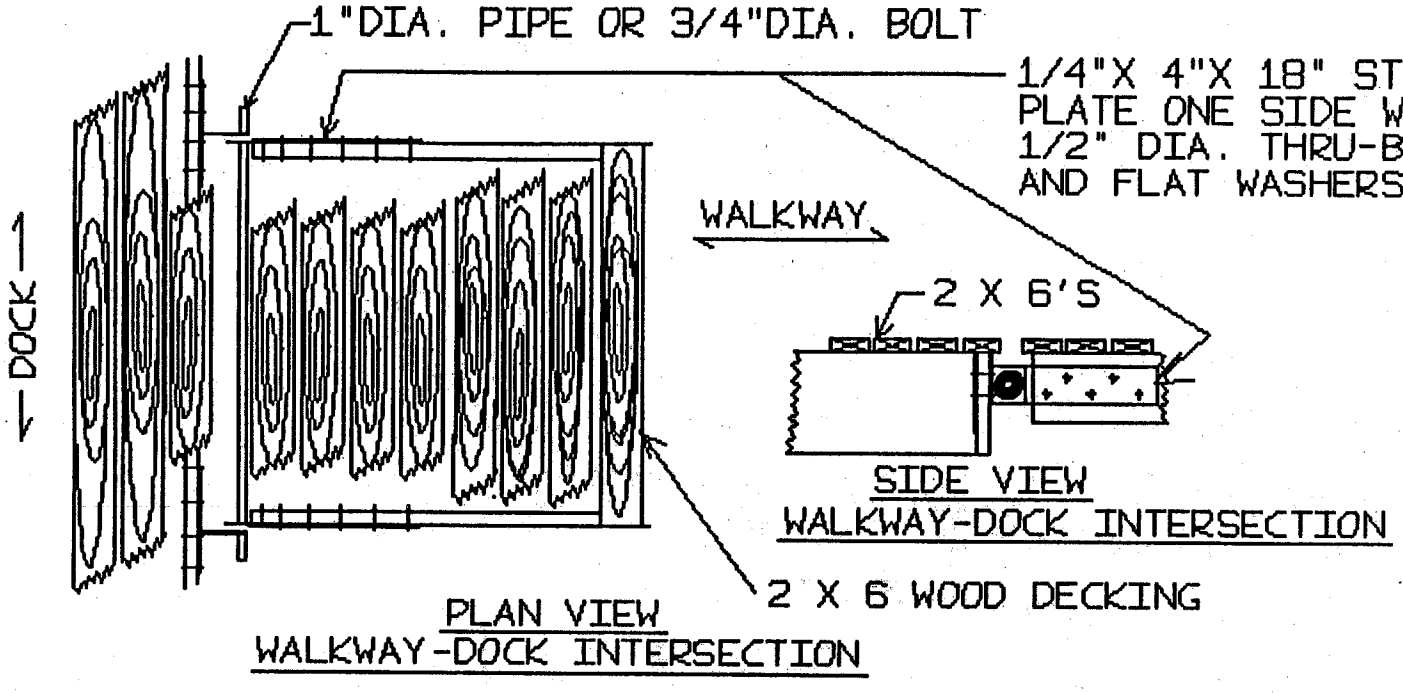

SUGGESTED METHOD FOR ATTACHING WALKWAY HINGE

ADDITIONAL GUIDELINES AND RECOMMENDATIONS:

1) HANDRAIL CONSTRUCTION GUIDELINES-
   A. TOP RAIL AT 42" ABOVE DECK.
   B. INTERMEDIATE RAIL AT 20" ABOVE DECK.
   C. WOOD: MINIMUM 2 X 4 'S.
   D. HANDRAIL SUPPORT POSTS, WOOD: MINIMUM 4 X 4'S, BOLTED THROUGH SUBSTRUCTURE.
2) RECOMMEND THAT WALKWAY BE MADE LONGER THAN STANDOFFS IN ORDER TO HAVE WALKWAY REACH SHORE.

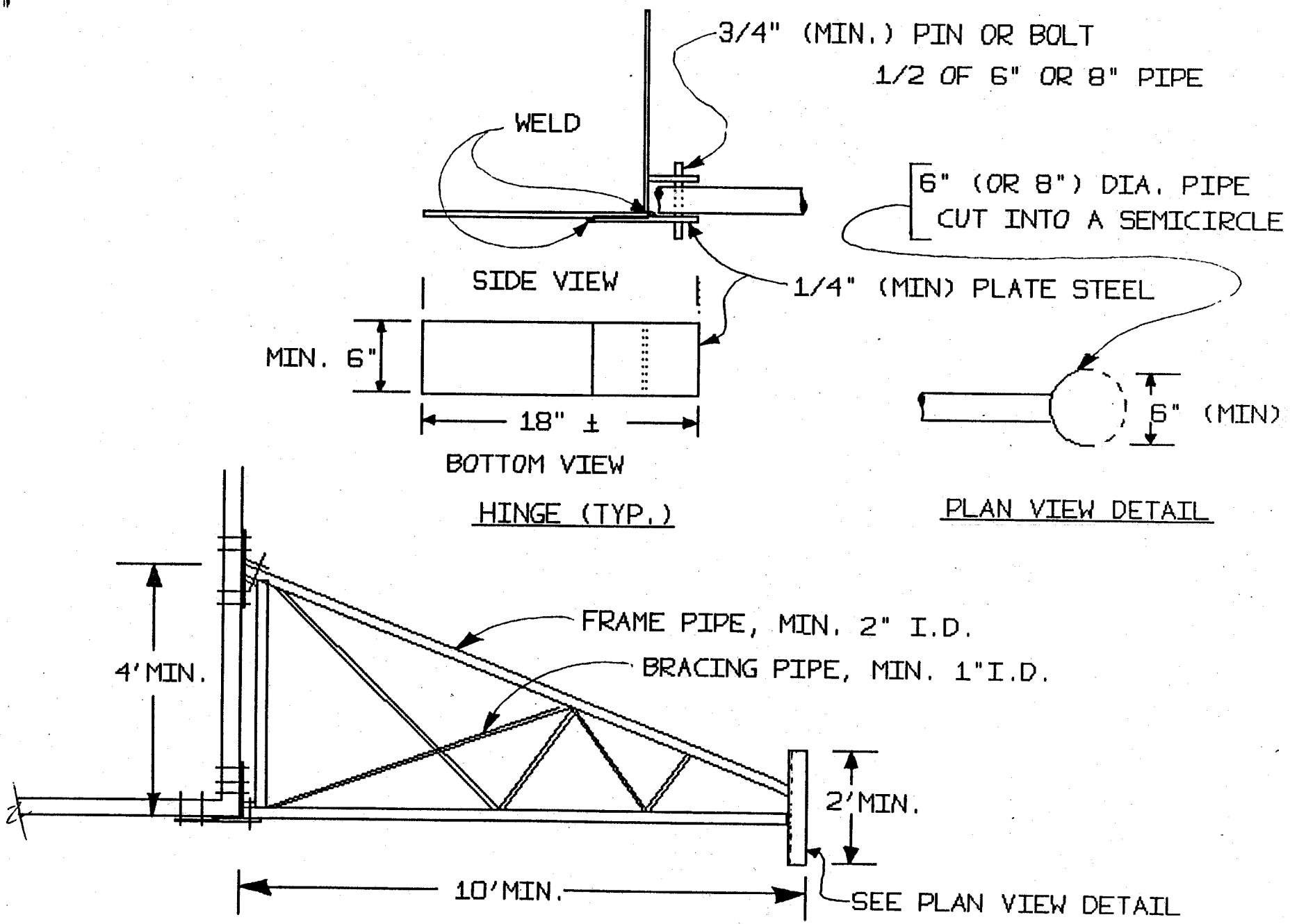

RECOMMENDED STAND OFF DESIGN

SPECIFICATIONS FOR PRIVATE DOCK ANCHORING SYSTEMS

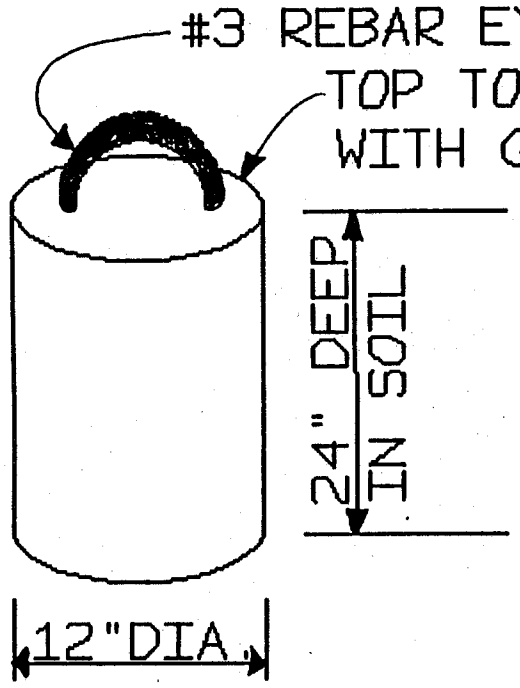

CONCRETE SHORE ANCHOR

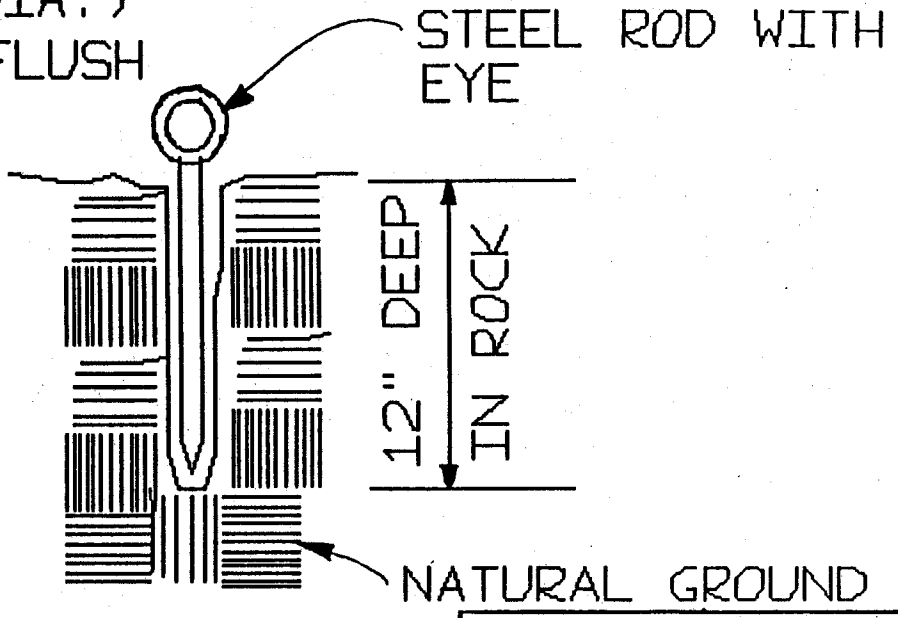

ROCK ANCHOR

RECOMMENDATIONS:

1) THREE SETS OF CONCRETE ANCHORS AT EACH ELEVATION- 461' ABOVE MSL
   472' ABOVE MSL
   487' ABOVE MSL

2) MINIMUM DIAMETER REQUIRED FOR STEEL CABLE IS 3/8"DIAMETER AND NYLON ROPE IS 5/8" DIAMETER.

How to Attach Wire Rope Clips

U-Bolt Clip

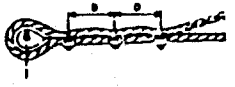

Thimble

U-Bolt of All clips on dead end of rope.
Never stagger clips.
Never put U-Bolt of clip on live end of rope.

Fist Grip Cl

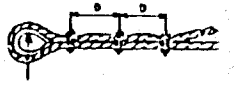

Thimble

Note: D = six times diamete of wire rope

NUMBER OF CLIPS AND THE PROPER TORQ NECESSARY TO ASSEMBLE WIRE ROPE EYE LO CONNECTIONS WITH A PROBABLE EFFICIENCY NOT MO THAN 80 PERCENT.

Rope diameter (In.)	Nominal size of clips	Number of clips	Torque be appl to nu of cli (ft-lbs
5/16	3/8	3	
3/8	3/8	3	
7/16	1/2	4	
1/2	1/2	4	
5/8	5/8	4	
3/4	3/4	5	1
7/8	1	5	1
1	1	6	1
1-1/4	1-1/4	7	2
1-3/8	1-1/2	7	3
1-1/2	1-1/2	8	3
1-3/4	1-3/4	8	5

The spacing of clips should be six times the diameter the wire rope. Thimbles shall be used if wire rope is

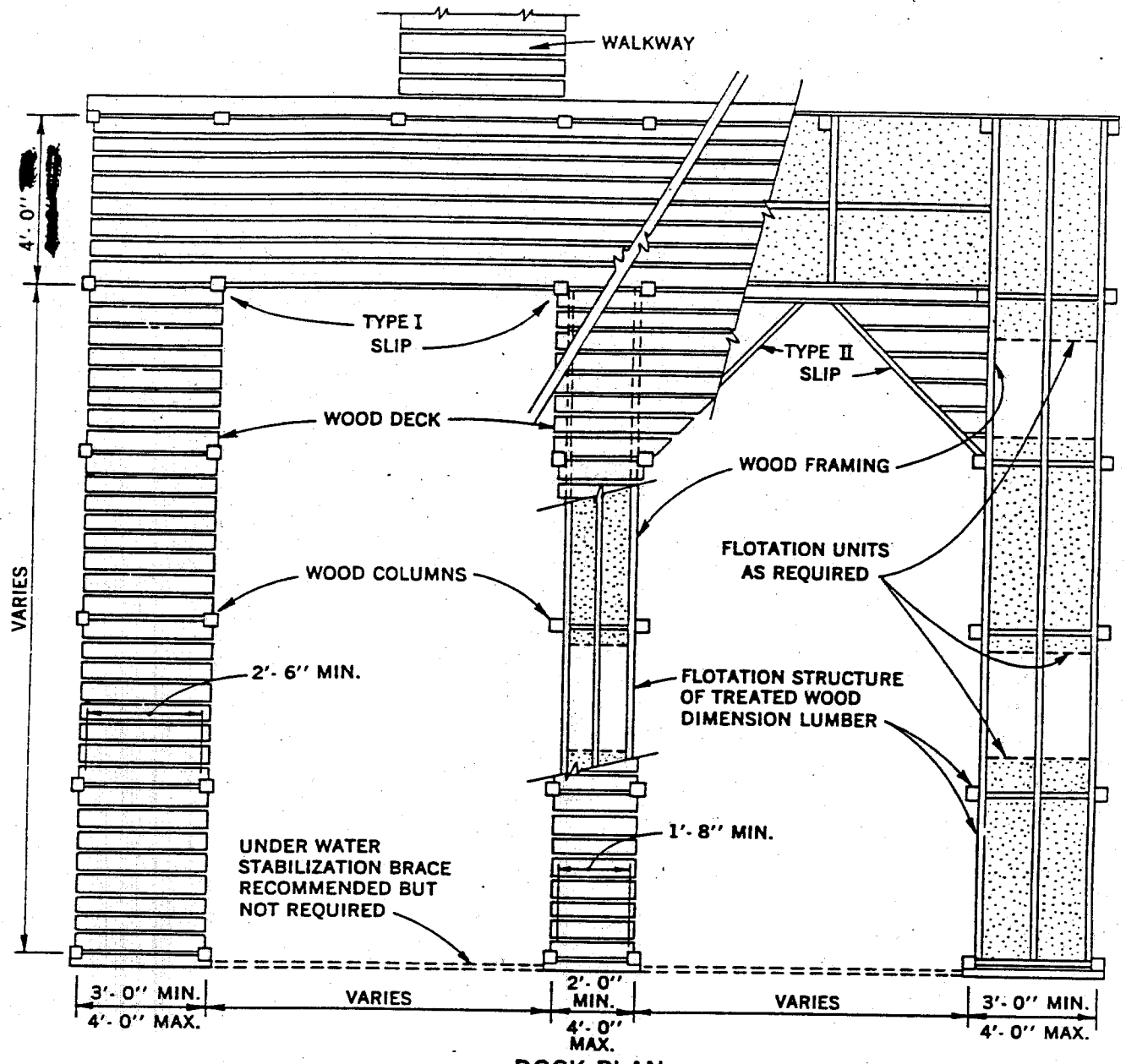

DOCK PLAN

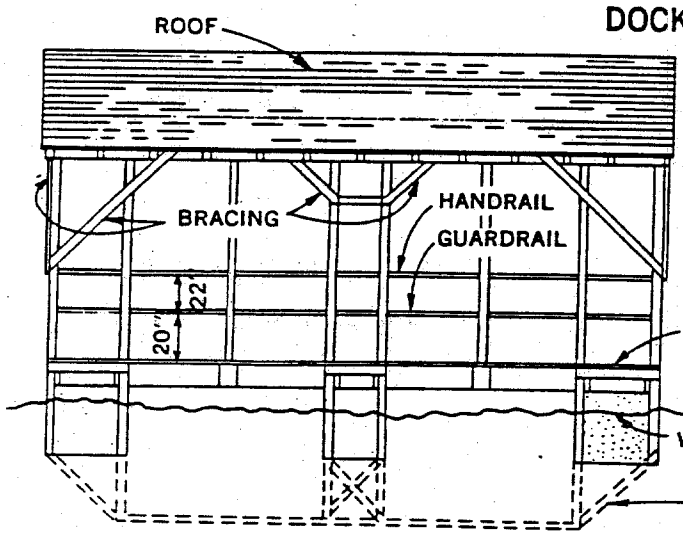

FRONT ELEVATION

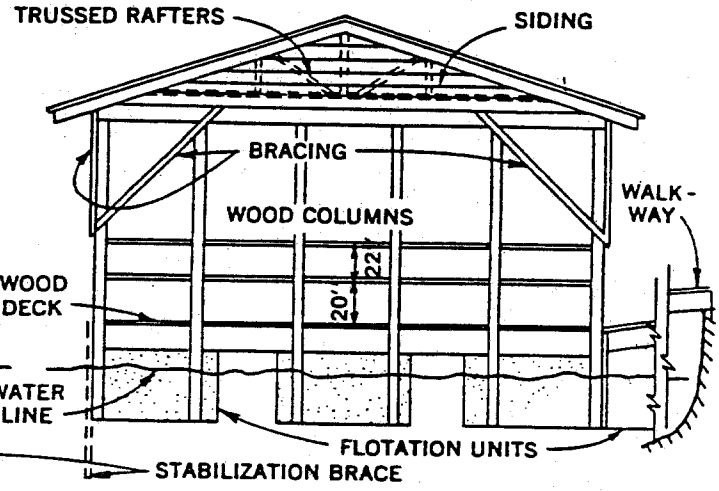

SIDE ELEVATION

WOOD BOAT DOCK

NOT TO SCALE

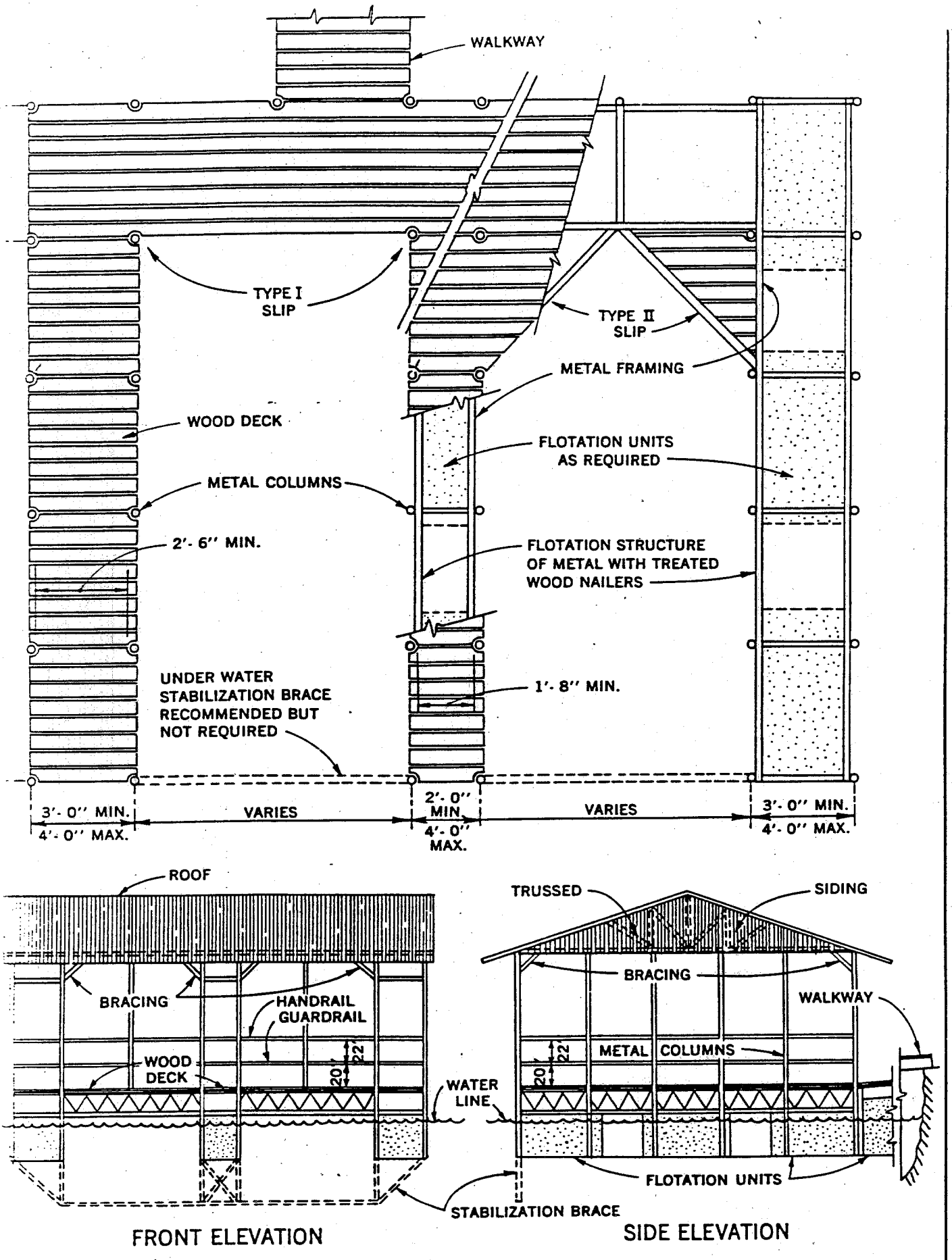

METAL BOAT DOCK

NOT TO SCALE

Additional Conditions of Permit for Private Floating Facilities with Electrical Service

These items and conditions are considered a part of:

Permit No. _____

Issued To: _____ Date: _____

Permit Expiration Date: _____

1. The construction, operation, and maintenance of the electrical facilities shall be accomplished without cost or expense to the United States, and subject to the general supervision and approval of the Resident Engineer. All work will be accomplished in such manner as not to endanger personnel or property of the United States or obstruct travel on the project lands. All work shall meet the requirements of the National Electric Code.

2. The United States shall not be responsible for any damages to property or injuries to persons which may arise or be incident to the construction, maintenance, or use of said land and facilities, and the permittee shall indemnify and save the United States harmless from any and all such claims.

3. In addition to Corps of Engineers and National Electric Code requirements, electric lines, outlets, and facilities will be kept in good working order and maintained in accordance with the electric code of the agency providing the electrical energy for said service line.

4. All electrical work shall be carefully designed. A plan showing the physical layout of the fixtures, conduit, fittings, wiring diagrams, and catalog data covering the items of material to be incorporated in the work shall be submitted to the Resident Engineer for approval. Approval of the above shall be obtained before any work is commenced. Electrical work shall be performed by competent electricians and shall be subject to Corps of Engineers approval, as well as all local and State codes and the National Electric Code in effect at the time. Prior to permit renewal, electrical facilities must be inspected by a licensed electrician who will then sign a form provided to you certifying that all components of the dock's electrical service meet current National Electric Code requirements. All work not in accordance with the above will be subject to disapproval and correction will be required.

5. All new docks with electrical service shall be wired to meet these requirements when constructed. All new wiring installed on existing docks shall meet these requirements and installation must be preceded by submittal of plans to the Resident Engineer for approval. All hazardous wiring and/or electrical fixtures which in the opinion of the Corps of Engineers inspector is an immediate threat to the safety of the public shall be repaired to the satisfaction of the inspector until the dock is completely rehabilitated.

6. The following general requirements will apply to all private floating facilities with electrical service:

a. The feeder conductor shall be a multi-conductor neoprene jacketed cable carried on a messenger wire or a messenger-type feeder cable. Feeder conductors must be of a type acceptable for overhead applications to floating facilities and denoted as resistant to sunlight damage. The feeder conductor shall contain a separate identified insulated grounding conductor in addition to the neutral conductor and messenger wire. This conductor shall be run from a grounding electrode on shore and terminate at an equipment grounding block in the panelboard, load center or outlet(s) on the dock to provide positive grounding for the wiring system. The feeder shall be No. 6 AWG minimum size unless voltage calculations are submitted indicating that a smaller size will provide an acceptable voltage level at the dock.

b. Overhead feeder cables shall be installed to have minimum clearance of 18 feet in areas where public vehicular traffic may occur. In other areas where a sailboat is physically prevented from entering, overhead feeder lines may be installed such that a minimum of 12 feet vertical clearance is maintained above ground and water at all lake elevations. A takeup reel shall be furnished either at the dock or the final pole to eliminate excess sag.

c. A fused disconnect switch shall be provided for de-energizing the feeder conductor at its source. The supply cable shall terminate on a main circuit breaker in a panelboard at the dock. The panelboard shall be designed to accommodate the number of branch circuits furnished on the dock. The panelboard shall be centrally and conspicuously located on the dock and shall be in a rainproof enclosure.

d. Where a meter pole is used, its location shall be such that the meter and pole-mounted service equipment are installed a minimum of 3 feet above elevation 487' msl., the top of the flood control pool.

e. Feeder conductors may be buried from the meter pole to the dock. Underground feeder conductors shall be of a type suitable for direct burial according to the National Electric Code. Other types of cable suitable for underwater use, but unsuitable for direct burial may be used if installed in conduit

for the underground portion of the run. The submerged loop portion of the feeder cable shall be attached to the dock, on the water side of the structure, with a "Kellems Grip" or other similar approved device which grips the outside jacket of the cable over a length not less than 6 inches and prevents strain from the weight of the cable from being placed on the conductors. The dock end of the feeder cable may then be fed onto a takeup reel to store and release excess cable as lake levels fluctuate.

f. All branch circuitry wiring on the dock shall be No. 12 AWG minimum size and must be placed in conduit. Conduit may be galvanized steel, PVC, or electrical metallic tubing.

g. Receptacles shall be of the grounding type, rated not less than 20 amperes and mounted at least 3 feet above the floor. Outside receptacles shall be weatherproof. All receptacles shall be protected by ground fault interrupter (GFI), either at the receptacle or by GFI circuit breaker in the panelbox. The dock lighting fixtures shall be so constructed and installed that water cannot enter or accumulate in the lampholders or other electrical parts. The fixtures shall be suitable for damp or wet locations and mounted a minimum 7 feet above the walkway. Each fixture shall be mounted on a corrosion-resistant box equipped with a neoprene gasket and threaded hubs for conduit connections.

h. The following items shall be grounded by an insulated conductor to be run with other circuit conductors:

(1) Boxes, cabinets, and all other metallic enclosures;

(2) Metal frames of utilization equipment; and

(3) Grounding terminals and receptacles. (All receptacles shall be grounding type)

7. Noncompliance with any of the above additional conditions to the Shoreline Use Permit will constitute grounds for cancellation of the permit as provided for in paragraph 26, Shoreline Use Permit conditions.

Please acknowledge your receipt of these additional conditions that apply to your permit by signing and returning one copy to the Resident Engineer.

_____ _____

Date Your Signature

THIS PAGE WAS
INTENTIONALLY LEFT BLANK

Suppliers of Coated and Extruded Polystyrene Flotation Materials
Greers Ferry Lake 1-21-92

Coated Flotation Materials:

**Cellofoam/North America, Inc. **double wrapped only
P.O. Box 406 800-241-3634
Conyers, GA 30207 Phone 404-483-4491

Perma "R" Products, Inc.
P.O. Box 419 800-647-6130
Grenada, MS 38901 Phone 601-226-8075

Steel and Foam Docks, Inc.
P.O. Box 5037
Kansas City, Kansas 66119 Phone 913-321-4463

Lakeland Industries, Inc. (Durkin Perma-Float brand)
Route 5 Box 540
Mountain Home, Arkansas 72653 Phone 501-425-8860

B & W Docks (Marlex by Formex)
Box 743 Formex 404-447-1393
Rocky Mount, MO 65072 Phone 314-365-0320

Rotocast Flotation Products 800-351-1363
S.F. Austin and Lincoln Roads 915-643-2517
P.O. Box 1059
Brownwood, TX 76804

Insul Bead Corporation
P.O. Box 149
Gravette, Arkansas 72736
501-787-5991 800-637-8776

Pal Products
401 S. Maple
Hannibal, MO 63401
314-221-6778

Extruded Polystyrene Flotation (closed cell):

Darragh Construction Materials
1401 E. 6th Street 800-482-5871
Little Rock, AR 72203 501-372-2112

Cope Plastics, Inc.
8520 Distribution Drive
Little Rock, AR 72209 501-568-2266

NOTE: All flotation materials are subject to approval as part of individual dock plans prior to construction.

EXHIBIT VIII

THIS PAGE WAS
INTENTIONALLY LEFT BLANK

DEPARTMENT OF THE ARMY

LITTLE ROCK DISTRICT, CORPS OF ENGINEERS

GREERS FERRY RESIDENT OFFICE
P.O. BOX 310
HEBER SPRINGS, ARKANSAS 72543

MEMO TO FILE

6 MAY 1992

SUBJECT: Sue Ann Acres Dock Zoning

1. Due to a request for private boat dock adjacent to Sue Ann Acres, the problem of Optium Use came up. The zoning for private docks includes the public property adjacent to lots 42 thru 68. Currently there are 8 docks in place, 1 approved and under construction (Snow), and 1 more approved (McKee). Since all lot owners are presumed, eventually, to request a dock permit, we looked at the amount of shoreline, keeping the required 100' spacing between docks. The result is that there is room for very few additional docks.

2. In attempt to accomodate as many adjacent lot owners as possible without jeopardizing the integrity of the Shoreline Management Plan, a decision to exercise the authority of the Resident Engineer to require additional docks in this area to be community docks was enacted. This authority rests in the Shoreline Management Regulation.

3. From this date all future docks in Sue Ann Acres will require a minimum of four owners. These persons must be owners of one of the adjacent lots in Sue Ann Acres that are zoned for private docks. Additionally, Mr. McKee, the person currently requesting authorization for a dock adjacent to lots 55 & 56, made application prior to the new Shoreline Management Regulation. Therefore he will be allowed to place a dock without three additional applicants. He will, however, be required to sign an agreement stating his dock is approved with the condition that it is a community dock and others will be required to add on to his dock rather than construct their own separate dock. He also must first submit detailed plans and they must be approved prior to placing a dock.

SIGNED

Wm. C. Garner
Resident Engineer
Greers Ferry

EXHIBIT IX

THIS PAGE WAS
INTENTIONALLY LEFT BLANK